UNITAC

Member IMC Group

Indexable deep hole drilling tool

UNIDEX

STS
Single Tube System

DTS
Double Tube System

WORLD WIDE BEST SELLER

Unidex has been used around the world for its high quality and ease of use for a quarter-century

UNIDEX ø114.30mm

UNIDEX

UNIDEX Features & Success examples 4

Product information

STS Single Tube System

STS-UNIDEX 3 cartridge type (ø38.00 - 106.99) 6

STS-UNIDEX 5 cartridge type (ø107.00 - 168.99) 8

STS-UNIDEX 7 cartridge type (ø169.00 - 232.99) 10

STS-UNIDEX 9 cartridge type (ø233.00) 12

DTS Double Tube System

DTS-UNIDEX 3 cartridge type (ø38.00 - 106.99) 14

DTS-UNIDEX 5 cartridge type (ø107.00 - 168.99) 16

DTS-UNIDEX 7 cartridge type (ø169.00 - 183.99) 18

Parts List 20

Plus Parts 21

Insert 22

Technical Information 24

Spare Parts Chart 34

Drill Tube 38

Special Tooling 40

Order Sheet 42

UNITAC Drill Head Series 45

Safety Notes 46

UNIDEX - Features and Success Examples

Multiple Insert Grades and Geometries

Uniquely designed 1123 type insert covers wide application area

Patent No 2702061

Sub Guide Pad

Stabilizes drill head inside guide bush

Adjustable Peripheral Cartridge

Actual Case 1

High-speed train axle drilling

Drilling ø60X2600mm, **UNIDEX** achieved the required hole tolerance in one pass before honing. Also helped to reduce operation process, lowering overall machining time.

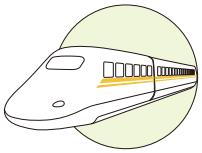

Component	Axle
Material	Carbon steel
Application	Solid drilling
Machine	BTA machine
Coolant	Oil based

Cutting Speed	80 m/min
Feed per Revolution	0.16 mm/rev
Chip Breaker	BR1
Grade	UC1125 (DLXT)

Actual Case 2

Wind power generator, main shaft drilling

UNIDEX achieved straightness of 0.2mm/1,500mm in one pass solid drilling ø155 x 1500(mm) of high hardness steel.

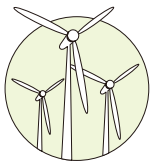

Component	Shaft
Material	Low alloyed steel
Application	Solid drilling
Machine	BTA machine
Coolant	Oil based

Cutting Speed	49 m/min
Feed per Revolution	0.12 mm/rev
Chip Breaker	G
Grade	UC2220 (NLX)

UNIDEX STS Outer Four Start Thread

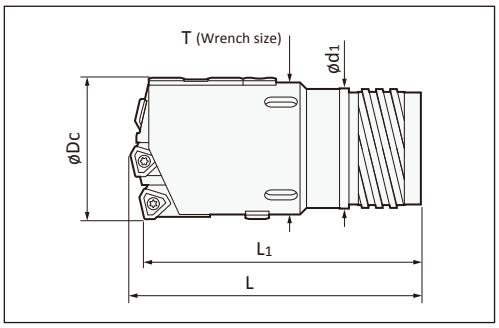

Drill Head Ordering Code	Diameter øDc (mm)	Number of Inserts	Drill Tube		Drill Head Dimensions (mm)			
			Ordering Code	Dia. (mm)	L	L1	d1	T
KUSTS07E-xx.xx	38.00 - 39.60	3	ST07	33	90	85	30	37
KUSTS08E-xx.xx	39.61 - 43.00	3	ST08	36	91	85	33	40
KUSTS09E-xx.xx	43.01 - 47.00	3	ST09	39	101	95	36	43
KUSTS10E-xx.xx	47.01 - 51.70	3	ST10	43	102	95	39	48
KUSTS11E-xx.xx	51.71 - 56.20	3	ST11	47	107	100	43	52
KUSTS12E-xx.xx	56.21 - 60.60	3	ST12	51	118	110	47	57
KUSTS13E-xx.xx	60.61 - 65.00	3	ST13	56	119	110	51	61
KUSTS14E-xx.xx	65.00 - 66.99	3	ST14	56	159	150	52	63
KUSTS15E-xx.xx	67.00 - 72.99	3	ST15	62	159	150	58	69
KUSTS16E-xx.xx	73.00 - 79.99	3	ST16	68	160	150	63	76
KUSTS17E-xx.xx	80.00 - 86.99	3	ST17	75	191	180	70	83
KUSTS18E-xx.xx	87.00 - 99.99	3	ST18	82	193	180	77	96
KUSTS19E-xx.xx	100.00 - 106.99	3	ST19	94	193	180	89	102

Ordering example for DIA=60.00mm : KUSTS12E-60.00
• Drill head of diameter 92mm or up has top guide pad pocket
• Before drilling operation please adjust tool diameter. For diameter adjustment please see page 24.

UNIDEX STS Inner Single Start Thread

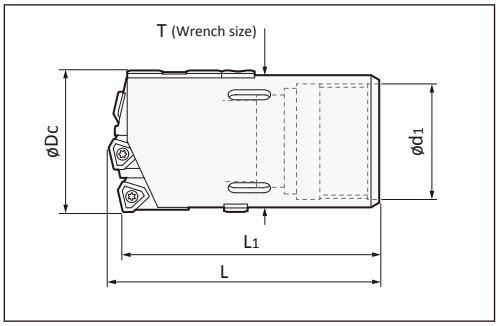

Drill Head Ordering Code	Diameter øDc (mm)	Number of Inserts	Drill Tube		Drill Head Dimensions (mm)			
			Ordering Code	Dia. (mm)	L	L1	d1	T
KUSTS33-xx.xx	38.00 - 39.99	3	UB33	33	85	80	30	37
KUSTS36-xx.xx	40.00 - 43.99	3	UB36	36	86	80	33	41
KUSTS39-xx.xx	44.00 - 46.99	3	UB39	39	96	90	37	43
KUSTS43-xx.xx	47.00 - 51.99	3	UB43	43	97	90	41	48
KUSTS47-xx.xx	52.00 - 56.99	3	UB47	47	107	100	44	53
KUSTS51-xx.xx	57.00 - 60.99	3	UB51	51	118	110	49	57
KUSTS56-xx.xx	61.00 - 67.99	3	UB56	56	119	110	53	64
KUSTS62-xx.xx	68.00 - 74.99	3	UB62	62	129	120	59	71
KUSTS68-xx.xx	75.00 - 80.99	3	UB68	68	161	150	65	77
KUSTS75-xx.xx	81.00 - 90.99	3	UB75	75	162	150	71	87
KUSTS82-xx.xx	91.00 - 98.99	3	UB82	82	162	150	79	95
KUSTS94-xx.xx	99.00 - 106.99	3	UB94	94	163	150	90	102

Ordering example for DIA=60.00mm : KUSTS51-60.00
• Drill head of diameter 92mm or up has top guide pad pocket
• Before drilling operation please adjust tool diameter. For diameter adjustment please see page 24.

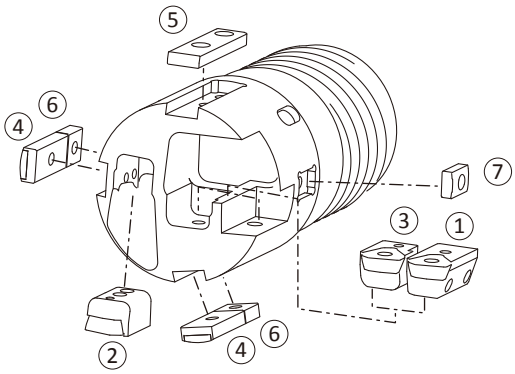

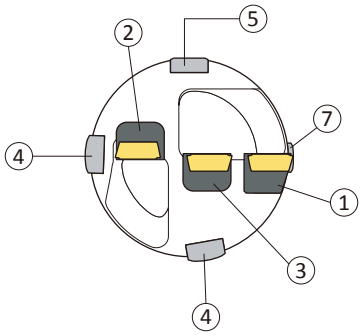

NOTE: According to diameter, some parts may not reflect the picture above

UNIDEX Spare Parts

See page 20 for screws and wrenches

PARTS

① Peripheral Cartridge

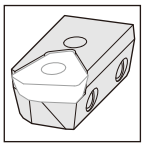

② Inner Cartridge

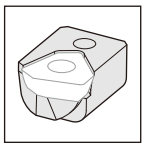

③ Center Cartridge

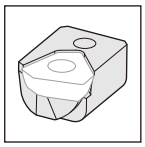

Dia. øDc (mm)	Peripheral ①	Inner ②	Center ③
38.00 - 39.99	OZ05R	IOZ05R	IOZ05R
40.00 - 44.99	OZ402-04	IOZ05R	IOZ05R
45.00 - 47.99	OZ402-04	IOZ05R	IOZ402-04
48.00 - 51.99	OZ402-04	IOZ402-04	IOZ402-04
52.00 - 54.99	OZ402-32	IOZ402-04	IOZ402-04
55.00 - 57.99	OZ402-32	IOZ402-04	IOZ402-32
58.00 - 59.99	OZ402-32	IOZ402-32	IOZ402-32
60.00 - 63.99	OZ402-32	IOZ402-32	IOZ402-32
64.00 - 67.99	OZ402-43	IOZ402-32	IOZ402-32
68.00 - 77.99	OZ402-32	IOZ402-43	IOZ402-43
78.00 - 84.99	OZ402-43	IOZ402-43	IOZ402-43
85.00 - 91.99	OZ402-63	IOZ402-43	IOZ402-43
92.00 - 98.99	OZ402-43	IOZ402-63	IOZ402-63
99.00 - 106.99	OZ402-63	IOZ402-63	IOZ402-63

④ Guide Pad

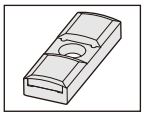

⑤ Filler

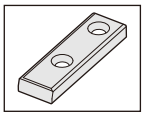

⑥ Protector

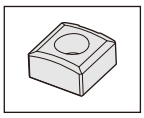

⑦ Sub Guide Pad

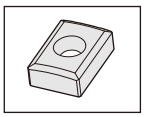

Dia. øDc (mm)	Guide Pad ④	qty	Filler * ⑤	qty	Protector ⑥	qty	Sub Guide Pad ⑦	qty
38.00 - 39.99	UG08CD	2	-	-	GPT08	2	CUG08	1
40.00 - 44.99	UG08CD	2	-	-	GPT08	2	CUG08	1
45.00 - 47.99	UG10CD	2	-	-	GPT10	2	CUG08	1
48.00 - 51.99	UG10CD	2	-	-	GPT10	2	CUG08	1
52.00 - 54.99	UG10CD	2	-	-	GPT10	2	CUG08	1
55.00 - 57.99	UG10CD	2	-	-	GPT10	2	CUG08	1
58.00 - 59.99	UG10CD	2	-	-	GPT10	2	CUG08	1
60.00 - 63.99	UG14CD	2	-	-	GPT14	2	CUG08	1
64.00 - 67.99	UG14CD	2	-	-	GPT14	2	CUG10	1
68.00 - 77.99	UG14CD	2	-	-	GPT14	2	CUG10	1
78.00 - 84.99	UG14CD	2	-	-	GPT14	2	CUG10	1
85.00 - 91.99	UG14CD	2	-	-	GPT14	2	CUG10	1
92.00 - 98.99	UG14CD	2	FILLER14	1	GPT14	2	CUG10	1
99.00 - 106.99	UG18CD	2	FL18-M	1	GPT18-M	2	CUG14-M	1

* Filler is to protect top guide pad pocket for drill head diameter 92.00 mm or up which has top pocket

UNIDEX Insert

See page 22 for grade and chipbreaker information

INSERTS

Type 508

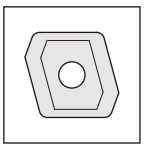

Type 1123

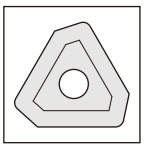

Dia. øDc (mm)	Peripheral Insert	qty	Inner Insert	qty	Center Insert	qty
38.00 - 39.99	508-05R	1	508-05R	1	508-05R	1
40.00 - 44.99	1123-04R	1	508-05R	1	508-05R	1
45.00 - 47.99	1123-04R	1	508-05R	1	1123-04R	1
48.00 - 51.99	1123-04R	1	1123-04R	1	1123-04R	1
52.00 - 54.99	1123-32R	1	1123-04R	1	1123-04R	1
55.00 - 57.99	1123-32R	1	1123-04R	1	1123-32R	1
58.00 - 59.99	1123-32R	1	1123-32R	1	1123-32R	1
60.00 - 63.99	1123-32R	1	1123-32R	1	1123-32R	1
64.00 - 67.99	1123-43R	1	1123-32R	1	1123-32R	1
68.00 - 77.99	1123-32R	1	1123-43R	1	1123-43R	1
78.00 - 84.99	1123-43R	1	1123-43R	1	1123-43R	1
85.00 - 91.99	1123-63R	1	1123-43R	1	1123-43R	1
92.00 - 98.99	1123-43R	1	1123-63R	1	1123-63R	1
99.00 - 106.99	1123-63R	1	1123-63R	1	1123-63R	1

- For whole parts list, see page 34.
- Plus (+) spare parts will enlarge drill diameter up to 5mm depending on peripheral cartridge size. (see page 21 for details)
- Drill heads come complete with: cartridges, filler, guide pads, protectors, sub guide pad and wrenches - but less inserts.

UNIDEX STS Outer Four Start Thread

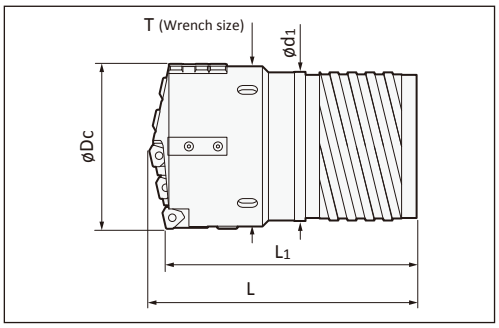

Drill Head Ordering Code	Diameter øDc (mm)	Number of Inserts	Drill Tube		Drill Head Dimensions (mm)			
			Ordering Code	Dia. (mm)	L	L1	d1	T
KUSTS19E-xx.xx	107.00 - 111.99	5	ST19	94	197	180	89	107
KUSTS20E-xx.xx	112.00 - 123.99	5	ST20	106	221	205	101	119
KUSTS21E-xx.xx	124.00 - 135.99	5	ST21	118	222	205	113	131
KUSTS22E-xx.xx	136.00 - 147.99	5	ST22	130	223	205	125	143
KUSTS23E-xx.xx	148.00 - 159.99	5	ST23	142	245	225	137	155
KUSTS24E-xx.xx	160.00 - 168.99	5	ST24	154	246	225	149	164

Ordering example for DIA=150.00mm : KUSTS23E-150.00
• Before drilling operation please adjust tool diameter. For diameter adjustment please see page 24.

UNIDEX STS Inner Single Start Thread

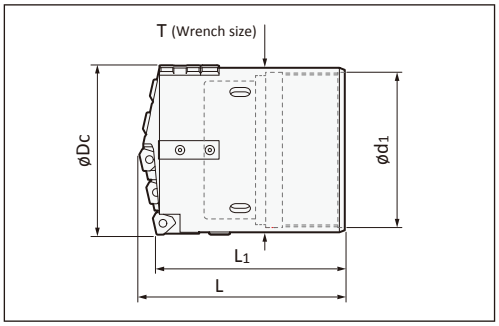

Drill Head Ordering Code	Diameter øDc (mm)	Number of Inserts	Drill Tube		Drill Head Dimensions (mm)			
			Ordering Code	Dia. (mm)	L	L1	d1	T
KUSTS94-xx.xx	107.00 - 110.99	5	UB94	94	164	150	90	106
KUSTS106-xx.xx	111.00 - 122.99	5	UB106	106	165	150	102	118
KUSTS118-xx.xx	123.00 - 134.99	5	UB118	118	167	150	114	130
KUSTS130-xx.xx	135.00 - 148.99	5	UB130	130	168	150	126	144
KUSTS142-xx.xx	149.00 - 161.99	5	UB142	142	170	150	139	157
KUSTS154-xx.xx	162.00 - 168.99	5	UB154	154	211	190	151	164

Ordering example for DIA=150.00mm : KUSTS142-150.00
• Before drilling operation please adjust tool diameter. For diameter adjustment please see page 24.

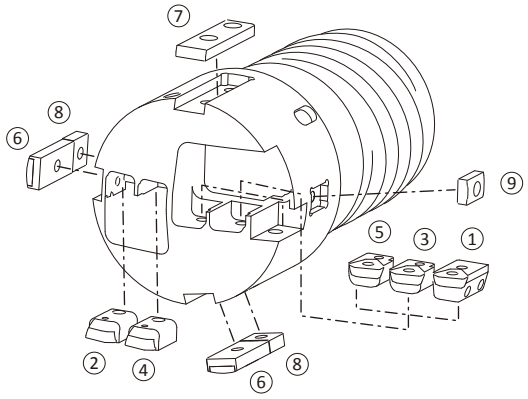

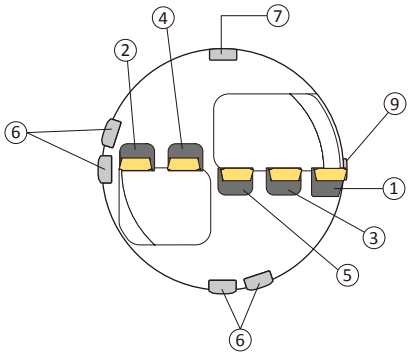

NOTE: According to diameter, some parts may not reflect the picture above

UNIDEX Spare Parts

See page 20 for screws and wrenches

PARTS

① Peripheral Cartridge

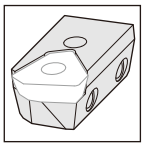

②③④ Inner Cartridge

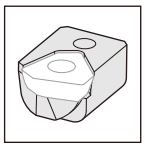

⑤ Center Cartridge

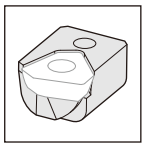

Dia. øDc (mm)	Peripheral ①	Inner ②	③	④	Center ⑤
107.00 - 117.99	OZ402-43	IOZ402-32	IOZ402-32	IOZ402-32	IOZ402-43
118.00 - 135.99	OZ402-43	IOZ402-43	IOZ402-43	IOZ402-43	IOZ402-43
136.00 - 144.99	OZ402-43	IOZ402-43	IOZ402-43	IOZ402-43	IOZ402-63
145.00 - 150.99	OZ402-43	IOZ402-43	IOZ402-63	IOZ402-43	IOZ402-63
151.00 - 156.99	OZ402-63	IOZ402-43	IOZ402-63	IOZ402-43	IOZ402-63
157.00 - 162.99	OZ402-63	IOZ402-43	IOZ402-63	IOZ402-63	IOZ402-63
163.00 - 168.99	OZ402-63	IOZ402-63	IOZ402-63	IOZ402-63	IOZ402-63

⑥ Guide Pad

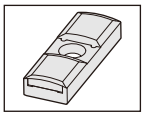

⑦ Filler

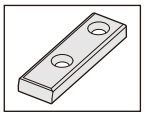

⑧ Protector

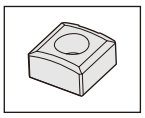

⑨ Sub Guide Pad

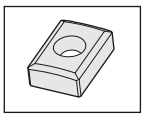

Dia. øDc (mm)	Guide Pad ⑥	qty	Filler ⑦	qty	Protector ⑧	qty	Sub Guide Pad ⑨	qty
107.00 - 117.99	UG18CD	2	FL18-M	1	GPT18-M	2	CUG14-M	1
118.00 - 135.99	UG18CD	2	FL18-M	1	GPT18-M	2	CUG14-M	1
136.00 - 144.99	UG18CD	4	FL18-M	1	GPT18-M	4	CUG14-M	1
145.00 - 150.99	UG18CD	4	FL18-M	1	GPT18-M	4	CUG14-M	1
151.00 - 156.99	UG18CD	4	FL18-M	1	GPT18-M	4	CUG14-M	1
157.00 - 162.99	UG18CD	4	FL18-M	1	GPT18-M	4	CUG14-M	1
163.00 - 168.99	UG18CD	4	FL18-M	1	GPT18-M	4	CUG14-M	1

UNIDEX Insert

See page 22 for grade and chipbreaker information

INSERTS

Type 1123

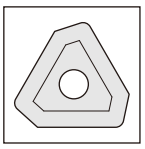

Dia. øDc (mm)	Peripheral Insert	qty	Inner Insert	qty		qty	Center Insert	qty
107.00 - 117.99	1123-43R	1	1123-32R	3	-		1123-43R	1
118.00 - 135.99	1123-43R	1	1123-43R	3	-		1123-43R	1
136.00 - 144.99	1123-43R	1	1123-43R	3	-		1123-63R	1
145.00 - 150.99	1123-43R	1	1123-43R	2	1123-63R	1	1123-63R	1
151.00 - 156.99	1123-63R	1	1123-43R	2	1123-63R	1	1123-63R	1
157.00 - 162.99	1123-63R	1	1123-43R	1	1123-63R	2	1123-63R	1
163.00 - 168.99	1123-63R	1	1123-63R	3	-		1123-63R	1

- For whole parts list, see page 35.
- Plus (+) spare parts will enlarge drill diameter up to 5mm depending on peripheral cartridge size. (see page 21 for details)
- Drill heads come complete with: cartridges, filler, guide pads, protectors, sub guide pad and wrenches - but less inserts.

UNIDEX STS Outer Four Start Thread

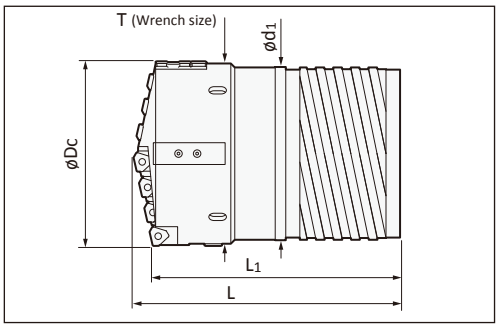

Drill Head Ordering Code	Diameter øDc (mm)	Number of Inserts	Drill Tube		Drill Head Dimensions (mm)			
			Ordering Code	Dia. (mm)	L	L1	d1	T
KUSTS24E-xx.xx	169.00 - 171.99	7	ST24	154	246	225	149	167
KUSTS25E-xx.xx	172.00 - 183.99	7	ST25	166	247	225	161	179
KUSTS26E-xx.xx	184.00 - 195.99	7	ST26	178	267	245	173	191
KUSTS27E-xx.xx	196.00 - 207.99	7	ST27	190	270	245	185	203
KUSTS28E-xx.xx	208.00 - 219.99	7	ST28	202	271	245	197	215
KUSTS29E-xx.xx	220.00 - 231.99	7	ST29	214	293	265	208	227
KUSTS30E-xx.xx	232.00 - 232.99	7	ST30	226	293	265	220	228

Ordering example for DIA=185.00mm : KUSTS26E-185.00
• Before drilling operation please adjust tool diameter. For diameter adjustment please see page 24.

UNIDEX STS Inner Single Start Thread

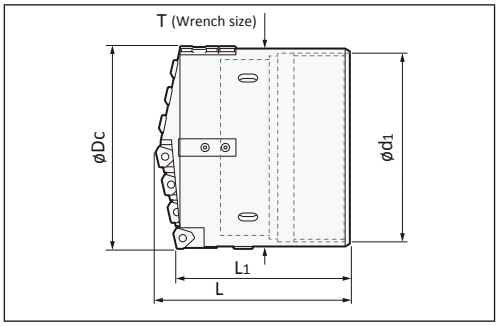

Drill Head Ordering Code	Diameter øDc (mm)	Number of Inserts	Drill Tube		Drill Head Dimensions (mm)			
			Ordering Code	Dia. (mm)	L	L1	d1	T
KUSTS154-xx.xx	169.00 - 173.99	7	UB154	154	211	190	151	169
KUSTS166-xx.xx	174.00 - 185.99	7	UB166	166	213	190	163	181
KUSTS178-xx.xx	186.00 - 197.99	7	UB178	178	212	190	175	193
KUSTS190-xx.xx	198.00 - 209.99	7	UB190	190	215	190	187	205
KUSTS202-xx.xx	210.00 - 221.99	7	UB202	202	217	190	199	217
KUSTS214-xx.xx	222.00 - 232.99	7	UB214	214	218	190	211	228

Ordering example for DIA=185.00mm : KUSTS166-185.00
• Before drilling operation please adjust tool diameter. For diameter adjustment please see page 24.

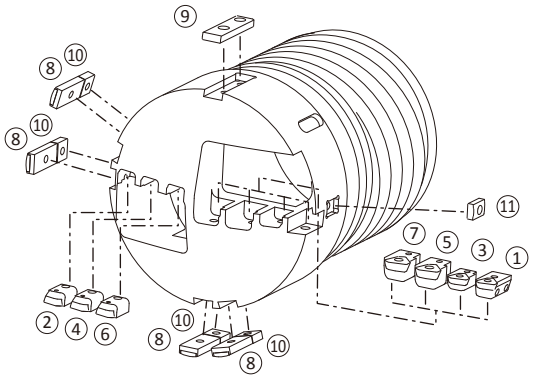

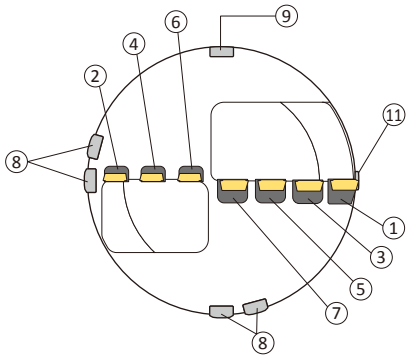

NOTE: According to diameter, some parts may not reflect the picture above

UNIDEX Spare Parts

See page 20 for screws and wrenches

PARTS

① Peripheral Cartridge

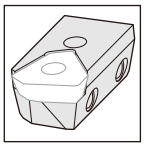

②③④⑤⑥ Inner Cartridge

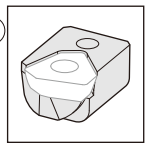

⑦ Center Cartridge

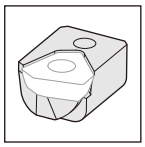

Dia. øDc (mm)	Peripheral ①	Inner ②	③	④	⑤	⑥	Center ⑦
169.00 - 188.99	OZ402-43	IOZ402-43	IOZ402-43	IOZ402-43	IOZ402-43	IOZ402-43	IOZ402-43
189.00 - 196.99	OZ402-43	IOZ402-43	IOZ402-43	IOZ402-43	IOZ402-43	IOZ402-43	IOZ402-63
197.00 - 202.99	OZ402-43	IOZ402-43	IOZ402-43	IOZ402-43	IOZ402-63	IOZ402-43	IOZ402-63
203.00 - 208.99	OZ402-43	IOZ402-43	IOZ402-63	IOZ402-43	IOZ402-63	IOZ402-43	IOZ402-63
209.00 - 214.99	OZ402-63	IOZ402-43	IOZ402-63	IOZ402-43	IOZ402-63	IOZ402-43	IOZ402-63
215.00 - 220.99	OZ402-63	IOZ402-43	IOZ402-63	IOZ402-43	IOZ402-63	IOZ402-63	IOZ402-63
221.00 - 226.99	OZ402-63	IOZ402-43	IOZ402-63	IOZ402-63	IOZ402-63	IOZ402-63	IOZ402-63
227.00 - 232.99	OZ402-63	IOZ402-63	IOZ402-63	IOZ402-63	IOZ402-63	IOZ402-63	IOZ402-63

⑧ Guide Pad

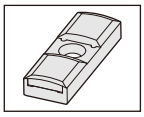

⑨ Filler

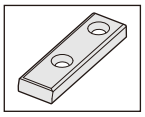

⑩ Protector

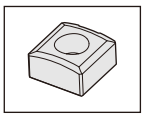

⑪ Sub Guide Pad

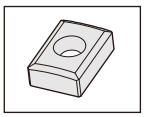

Dia. øDc (mm)	Guide Pad ⑧	qty	Filler ⑨	qty	Protector ⑩	qty	Sub Guide Pad ⑪	qty
169.00 - 188.99	UG18CD	4	FL18-M	1	GPT18-M	4	CUG14-M	1
189.00 - 196.99	UG18CD	4	FL18-M	1	GPT18-M	4	CUG14-M	1
197.00 - 202.99	UG18CD	4	FL18-M	1	GPT18-M	4	CUG14-M	1
203.00 - 208.99	UG18CD	4	FL18-M	1	GPT18-M	4	CUG14-M	1
209.00 - 214.99	UG18CD	4	FL18-M	1	GPT18-M	4	CUG14-M	1
215.00 - 220.99	UG18CD	4	FL18-M	1	GPT18-M	4	CUG14-M	1
221.00 - 226.99	UG18CD	4	FL18-M	1	GPT18-M	4	CUG14-M	1
227.00 - 232.99	UG18CD	4	FL18-M	1	GPT18-M	4	CUG14-M	1

UNIDEX Insert

See page 22 for grade and chipbreaker information

INSERTS

Type 1123

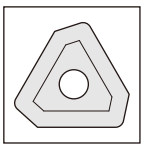

Dia. øDc (mm)	Peripheral Insert	qty	Inner Insert	qty		qty	Center Insert	qty
169.00 - 188.99	1123-43R	1	1123-43R	5	-		1123-43R	1
189.00 - 196.99	1123-43R	1	1123-43R	5	-		1123-63R	1
197.00 - 202.99	1123-43R	1	1123-43R	4	1123-63R	1	1123-63R	1
203.00 - 208.99	1123-43R	1	1123-43R	3	1123-63R	2	1123-63R	1
209.00 - 214.99	1123-63R	1	1123-43R	3	1123-63R	2	1123-63R	1
215.00 - 220.99	1123-63R	1	1123-43R	2	1123-63R	3	1123-63R	1
221.00 - 226.99	1123-63R	1	1123-43R	1	1123-63R	4	1123-63R	1
227.00 - 232.99	1123-63R	1	1123-63R	5	-		1123-63R	1

- For whole parts list, see pages 35-36.
- Plus (+) spare parts will enlarge drill diameter up to 5mm depending on peripheral cartridge size. (see page 21 for details)
- Drill heads come complete with: cartridges, filler, guide pads, protectors, sub guide pad and wrenches - but less inserts.

UNIDEX STS Outer Four Start Thread

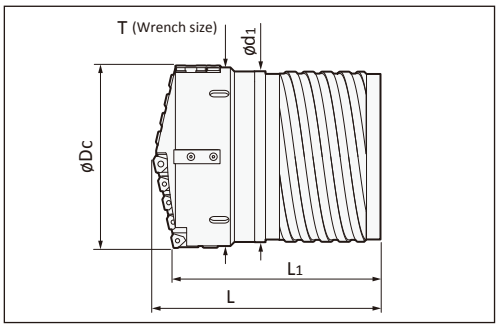

Drill Head Ordering Code	Diameter øDc (mm)	Number of Inserts	Drill Tube		Drill Head Dimensions (mm)			
			Ordering Code	Dia. (mm)	L	L1	d1	T
KUSTS30E-xx.xx	233.00 - 243.99	9	ST30	226	294	265	220	239
KUSTS31E-xx.xx	244.00 - 255.99	9	ST31	238	294	265	232	251
KUSTS32E-xx.xx	256.00 - 267.99	9	ST32	250	322	290	244	263
KUSTS33E-xx.xx	268.00 - 279.99	9	ST33	262	323	290	256	275
KUSTS34E-xx.xx	280.00 - 291.99	9	ST34	274	325	290	268	287

Ordering example for DIA=240.00mm : KUSTS30E-240.00
• Before drilling operation please adjust tool diameter. For diameter adjustment please see page 24.

• Larger sizes available upon request. Please contact Unitac sales department for further information.

UNIDEX STS Inner Single Start Thread

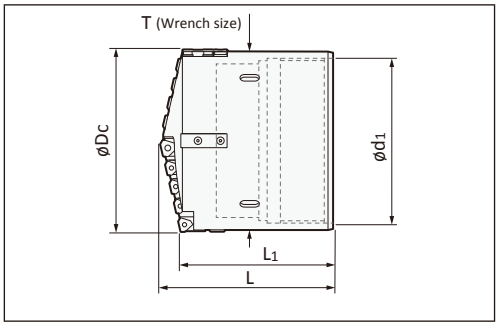

Drill Head Ordering Code	Diameter øDc (mm)	Number of Inserts	Drill Tube		Drill Head Dimensions (mm)			
			Ordering Code	Dia. (mm)	L	L1	d1	T
KUSTS214-xx.xx	233.00 - 233.99	9	UB214	214	217	190	211	229
KUSTS226-xx.xx	234.00 - 245.99	9	UB226	226	219	190	223	241
KUSTS238-xx.xx	246.00 - 257.99	9	UB238	238	221	190	235	253
KUSTS250-xx.xx	258.00 - 269.99	9	UB250	250	242	210	245	265
KUSTS262-xx.xx	270.00 - 281.99	9	UB262	262	244	210	259	277
KUSTS274-xx.xx	282.00 - 293.99	9	UB274	274	245	210	271	289

Ordering example for DIA=240.00mm : KUSTS226-240.00
• Before drilling operation please adjust tool diameter. For diameter adjustment please see page 24.

• Larger sizes available upon request. Please contact Unitac sales department for further information.

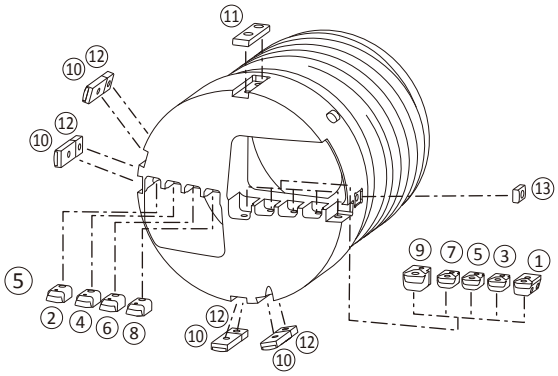

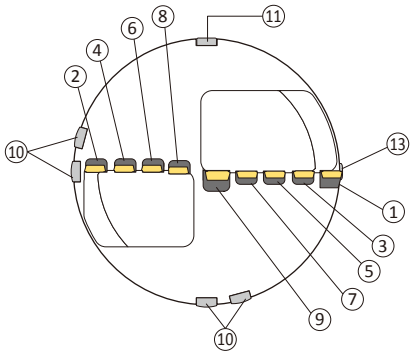

NOTE: According to diameter, some parts may not reflect the picture above

UNIDEX Spare Parts

See page 20 for screws and wrenches

PARTS

① Peripheral Cartridge

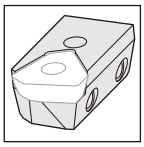

②③④⑤⑥⑦⑧ Inner Cartridge

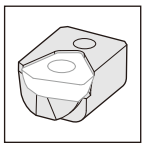

⑨ Center Cartridge

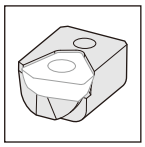

Dia. øDc (mm)	Peripheral ①	Inner ②	③	④	⑤	⑥	⑦	⑧	Center ⑨
233.00 - 247.99	OZ402-43	IOZ402-43	IOZ402-43	IOZ402-43	IOZ402-43	IOZ402-43	IOZ402-43	IOZ402-43	IOZ402-63
248.00 - 253.99	OZ402-63	IOZ402-43	IOZ402-43	IOZ402-43	IOZ402-43	IOZ402-43	IOZ402-43	IOZ402-43	IOZ402-63
254.00 - 258.99	OZ402-63	IOZ402-43	IOZ402-43	IOZ402-43	IOZ402-43	IOZ402-43	IOZ402-63	IOZ402-43	IOZ402-63
259.00 - 264.99	OZ402-63	IOZ402-43	IOZ402-43	IOZ402-43	IOZ402-63	IOZ402-43	IOZ402-63	IOZ402-43	IOZ402-63
265.00 - 271.99	OZ402-63	IOZ402-43	IOZ402-63	IOZ402-43	IOZ402-63	IOZ402-43	IOZ402-63	IOZ402-43	IOZ402-63
272.00 - 275.99	OZ402-63	IOZ402-43	IOZ402-63	IOZ402-43	IOZ402-63	IOZ402-43	IOZ402-63	IOZ402-63	IOZ402-63
276.00 - 284.99	OZ402-63	IOZ402-43	IOZ402-63	IOZ402-43	IOZ402-63	IOZ402-63	IOZ402-63	IOZ402-63	IOZ402-63
285.00 - 289.99	OZ402-63	IOZ402-43	IOZ402-63	IOZ402-63	IOZ402-63	IOZ402-63	IOZ402-63	IOZ402-63	IOZ402-63
290.00 - 293.99	OZ402-63	IOZ402-63	IOZ402-63	IOZ402-63	IOZ402-63	IOZ402-63	IOZ402-63	IOZ402-63	IOZ402-63

⑩ Guide Pad

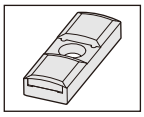

⑪ Filler

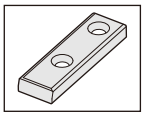

⑫ Protector

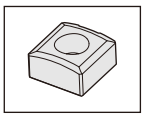

⑬ Sub Guide Pad

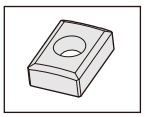

Dia. øDc (mm)	Guide Pad ⑩	qty	Filler ⑪	qty	Protector ⑫	qty	Sub Guide Pad ⑬	qty
233.00 - 247.99	UG18CD	4	FL18-M	1	GPT18-M	4	CUG14-M	1
248.00 - 253.99	UG18CD	4	FL18-M	1	GPT18-M	4	CUG14-M	1
254.00 - 258.99	UG18CD	4	FL18-M	1	GPT18-M	4	CUG14-M	1
259.00 - 264.99	UG18CD	4	FL18-M	1	GPT18-M	4	CUG14-M	1
265.00 - 271.99	UG18CD	4	FL18-M	1	GPT18-M	4	CUG14-M	1
272.00 - 275.99	UG18CD	4	FL18-M	1	GPT18-M	4	CUG14-M	1
276.00 - 284.99	UG18CD	4	FL18-M	1	GPT18-M	4	CUG14-M	1
285.00 - 289.99	UG18CD	4	FL18-M	1	GPT18-M	4	CUG14-M	1
290.00 - 293.99	UG18CD	4	FL18-M	1	GPT18-M	4	CUG14-M	1

UNIDEX Insert

See page 22 for grade and chipbreaker information

INSERTS

Type 1123

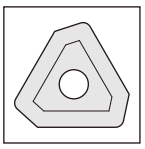

Dia. øDc (mm)	Peripheral Insert	qty	Inner Insert	qty		qty	Center Insert	qty
233.00 - 247.99	1123-43R	1	1123-43R	7	-		1123-63R	1
248.00 - 253.99	1123-63R	1	1123-43R	7	-		1123-63R	1
254.00 - 258.99	1123-63R	1	1123-43R	6	1123-63R	1	1123-63R	1
259.00 - 264.99	1123-63R	1	1123-43R	5	1123-63R	2	1123-63R	1
265.00 - 271.99	1123-63R	1	1123-43R	4	1123-63R	3	1123-63R	1
272.00 - 275.99	1123-63R	1	1123-43R	3	1123-63R	4	1123-63R	1
276.00 - 284.99	1123-63R	1	1123-43R	2	1123-63R	5	1123-63R	1
285.00 - 289.99	1123-63R	1	1123-43R	1	1123-63R	6	1123-63R	1
290.00 - 293.99	1123-63R	1	1123-63R	7	-		1123-63R	1

- For whole parts list, see page 36.
- Plus (+) spare parts will enlarge drill diameter up to 5mm depending on peripheral cartridge size. (see page 21 for details)
- Drill heads come complete with: cartridges, filler, guide pads, protectors, sub guide pad and wrenches - but less inserts.

UNIDEX DTS Outer Four Start Thread

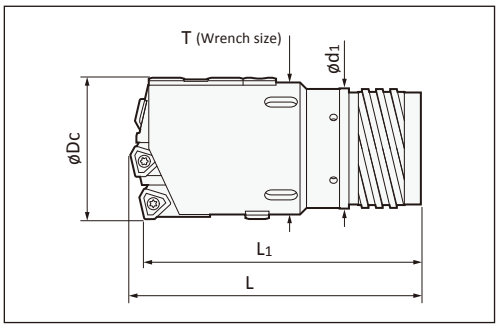

Drill Head Ordering Code	Diameter øDc (mm)	Number of Inserts	Outer Tube		Drill Head Dimensions (mm)			
			Ordering Code	Dia. (mm)	L	L1	d1	T
KUDTS08E-xx.xx	38.00 - 39.60	3	OT08	35.5	90	85	33	37
KUDTS09E-xx.xx	39.61 - 43.00	3	OT09	39	91	85	36	40
KUDTS10E-xx.xx	43.01 - 47.00	3	OT10	42.5	101	95	39	43
KUDTS11E-xx.xx	47.01 - 51.70	3	OT11	46.5	102	100	43	48
KUDTS12E-xx.xx	51.71 - 56.20	3	OT12	51	107	100	47	52
KUDTS13E-xx.xx	56.21 - 65.00	3	OT13	55.5	119	110	51	61
KUDTS14E-xx.xx	65.00 - 66.99	3	OT14	56	159	150	52	63
KUDTS15E-xx.xx	67.00 - 72.99	3	OT15	62	159	150	58	69
KUDTS16E-xx.xx	73.00 - 79.99	3	OT16	68	160	150	63	76
KUDTS17E-xx.xx	80.00 - 86.99	3	OT17	75	191	180	70	83
KUDTS18E-xx.xx	87.00 - 99.99	3	OT18	82	193	180	77	96
KUDTS19E-xx.xx	100.00 - 106.99	3	OT19	94	193	180	89	102

Ordering example for DIA=60.00mm : KUDTS13E-60.00
• Drill head of diameter 92mm or up has top guide pad pocket
• Before drilling operation please adjust tool diameter. For diameter adjustment please see page 24.

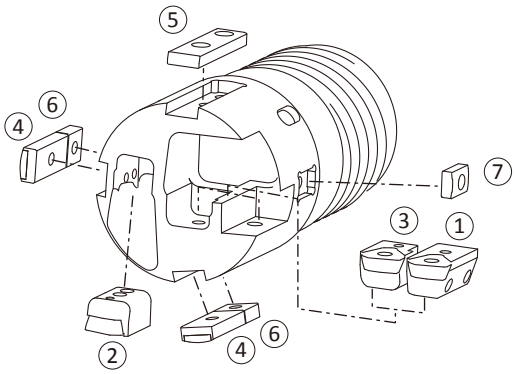

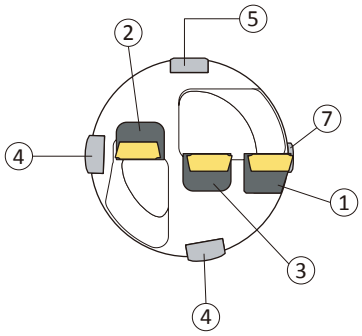

NOTE: According to diameter, some parts may not reflect the picture above

UNIDEX Spare Parts

See page 20 for screws and wrenches

PARTS

① Peripheral Cartridge

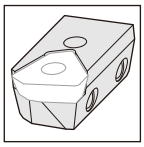

② Inner Cartridge

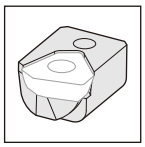

③ Center Cartridge

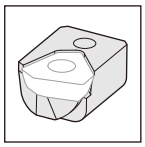

Dia. øDc (mm)	Peripheral ①	Inner ②	Center ③
38.00 - 39.99	OZ05R	IOZ05R	IOZ05R
40.00 - 44.99	OZ402-04	IOZ05R	IOZ05R
45.00 - 47.99	OZ402-04	IOZ05R	IOZ402-04
48.00 - 51.99	OZ402-04	IOZ402-04	IOZ402-04
52.00 - 54.99	OZ402-32	IOZ402-04	IOZ402-04
55.00 - 57.99	OZ402-32	IOZ402-04	IOZ402-32
58.00 - 59.99	OZ402-32	IOZ402-32	IOZ402-32
60.00 - 63.99	OZ402-32	IOZ402-32	IOZ402-32
64.00 - 67.99	OZ402-43	IOZ402-32	IOZ402-32
68.00 - 77.99	OZ402-32	IOZ402-43	IOZ402-43
78.00 - 84.99	OZ402-43	IOZ402-43	IOZ402-43
85.00 - 91.99	OZ402-63	IOZ402-43	IOZ402-43
92.00 - 98.99	OZ402-43	IOZ402-63	IOZ402-63
99.00 - 106.99	OZ402-63	IOZ402-63	IOZ402-63

④ Guide Pad

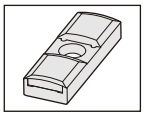

⑤ Filler

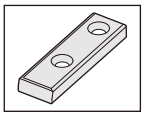

⑥ Protector

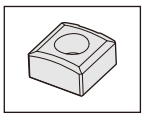

⑦ Sub Guide Pad

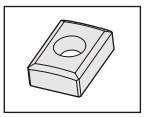

Dia. øDc (mm)	Guide Pad ④	qty	Filler * ⑤	qty	Protector ⑥	qty	Sub Guide Pad ⑦	qty
38.00 - 39.99	UG08CD	2	-	-	GPT08	2	CUG08	1
40.00 - 44.99	UG08CD	2	-	-	GPT08	2	CUG08	1
45.00 - 47.99	UG10CD	2	-	-	GPT10	2	CUG08	1
48.00 - 51.99	UG10CD	2	-	-	GPT10	2	CUG08	1
52.00 - 54.99	UG10CD	2	-	-	GPT10	2	CUG08	1
55.00 - 57.99	UG10CD	2	-	-	GPT10	2	CUG08	1
58.00 - 59.99	UG10CD	2	-	-	GPT10	2	CUG08	1
60.00 - 63.99	UG14CD	2	-	-	GPT14	2	CUG08	1
64.00 - 67.99	UG14CD	2	-	-	GPT14	2	CUG10	1
68.00 - 77.99	UG14CD	2	-	-	GPT14	2	CUG10	1
78.00 - 84.99	UG14CD	2	-	-	GPT14	2	CUG10	1
85.00 - 91.99	UG14CD	2	-	-	GPT14	2	CUG10	1
92.00 - 98.99	UG14CD	2	FILLER14	1	GPT14	2	CUG10	1
99.00 - 106.99	UG18CD	2	FL18-M	1	GPT18-M	2	CUG14-M	1

* Filler is to protect top guide pad pocket for drill head diameter 92.00 mm or up which has top pocket

UNIDEX Insert

See page 22 for grade and chipbreaker information

INSERTS

Type 508

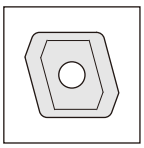

Type 1123

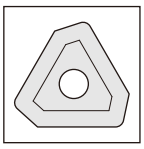

Dia. øDc (mm)	Peripheral Insert	qty	Inner Insert	qty	Center Insert	qty
38.00 - 39.99	508-05R	1	508-05R	1	508-05R	1
40.00 - 44.99	1123-04R	1	508-05R	1	508-05R	1
45.00 - 47.99	1123-04R	1	508-05R	1	1123-04R	1
48.00 - 51.99	1123-04R	1	1123-04R	1	1123-04R	1
52.00 - 54.99	1123-32R	1	1123-04R	1	1123-04R	1
55.00 - 57.99	1123-32R	1	1123-04R	1	1123-32R	1
58.00 - 59.99	1123-32R	1	1123-32R	1	1123-32R	1
60.00 - 63.99	1123-32R	1	1123-32R	1	1123-32R	1
64.00 - 67.99	1123-43R	1	1123-32R	1	1123-32R	1
68.00 - 77.99	1123-32R	1	1123-43R	1	1123-43R	1
78.00 - 84.99	1123-43R	1	1123-43R	1	1123-43R	1
85.00 - 91.99	1123-63R	1	1123-43R	1	1123-43R	1
92.00 - 98.99	1123-43R	1	1123-63R	1	1123-63R	1
99.00 - 106.99	1123-63R	1	1123-63R	1	1123-63R	1

- For whole parts list, see page 34.
- Plus (+) spare parts will enlarge drill diameter up to 5mm depending on peripheral cartridge size. (see page 21 for details)
- Drill heads come complete with: cartridges, filler, guide pads, protectors, sub guide pad and wrenches - but less inserts.

UNIDEX DTS Outer Four Start Thread

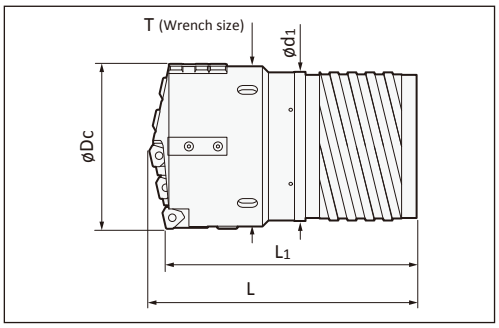

Drill Head Ordering Code	Diameter øDc (mm)	Number of Inserts	Outer Tube		Drill Head Dimensions (mm)			
			Ordering Code	Dia. (mm)	L	L1	d1	T
KUDTS19E-xx.xx	**107.00 - 111.99**	5	OT19	94	197	180	89	107
KUDTS20E-xx.xx	**112.00 - 123.99**	5	OT20	106	221	205	101	119
KUDTS21E-xx.xx	**124.00 - 135.99**	5	OT21	118	222	205	113	131
KUDTS22E-xx.xx	**136.00 - 147.99**	5	OT22	130	223	205	125	143
KUDTS23E-xx.xx	**148.00 - 159.99**	5	OT23	142	245	225	137	155
KUDTS24E-xx.xx	**160.00 - 168.99**	5	OT24	154	246	225	149	164

Ordering example for DIA=150.00mm : KUDTS23E-150.00
• Before drilling operation please adjust tool diameter. For diameter adjustment please see page 24.

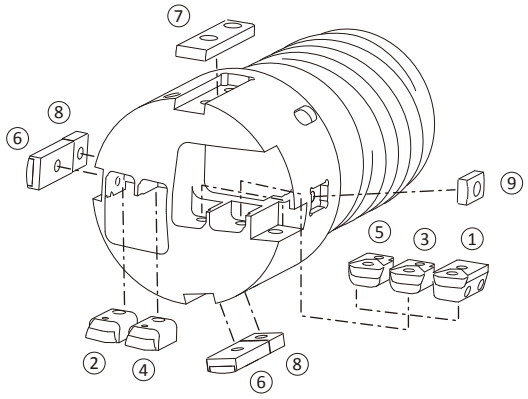

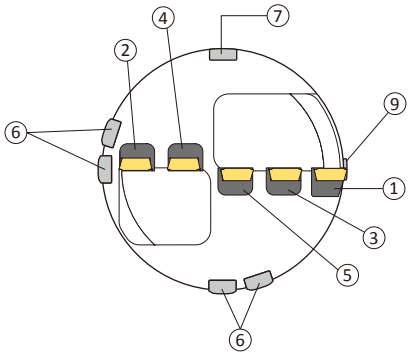

NOTE: According to diameter, some parts may not reflect the picture above

UNIDEX Spare Parts

See page 20 for screws and wrenches

PARTS

① Peripheral Cartridge

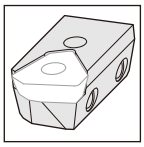

②③④ Inner Cartridge

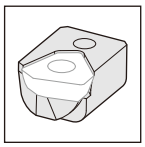

⑤ Center Cartridge

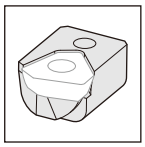

Dia. øDc (mm)	Peripheral ①	Inner ②	③	④	Center ⑤
107.00 - 117.99	OZ402-43	IOZ402-32	IOZ402-32	IOZ402-32	IOZ402-43
118.00 - 135.99	OZ402-43	IOZ402-43	IOZ402-43	IOZ402-43	IOZ402-43
136.00 - 144.99	OZ402-43	IOZ402-43	IOZ402-43	IOZ402-43	IOZ402-63
145.00 - 150.99	OZ402-43	IOZ402-43	IOZ402-63	IOZ402-43	IOZ402-63
151.00 - 156.99	OZ402-63	IOZ402-43	IOZ402-63	IOZ402-43	IOZ402-63
157.00 - 162.99	OZ402-63	IOZ402-43	IOZ402-63	IOZ402-63	IOZ402-63
163.00 - 168.99	OZ402-63	IOZ402-63	IOZ402-63	IOZ402-63	IOZ402-63

⑥ Guide Pad

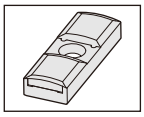

⑦ Filler

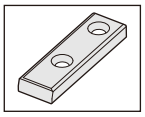

⑧ Protector

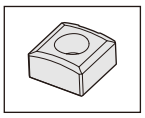

⑨ Sub Guide Pad

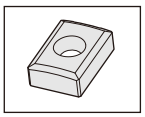

Dia. øDc (mm)	Guide Pad ⑥	qty	Filler ⑦	qty	Protector ⑧	qty	Sub Guide Pad ⑨	qty
107.00 - 117.99	UG18CD	2	FL18-M	1	GPT18-M	2	CUG14-M	1
118.00 - 135.99	UG18CD	2	FL18-M	1	GPT18-M	2	CUG14-M	1
136.00 - 144.99	UG18CD	4	FL18-M	1	GPT18-M	4	CUG14-M	1
145.00 - 150.99	UG18CD	4	FL18-M	1	GPT18-M	4	CUG14-M	1
151.00 - 156.99	UG18CD	4	FL18-M	1	GPT18-M	4	CUG14-M	1
157.00 - 162.99	UG18CD	4	FL18-M	1	GPT18-M	4	CUG14-M	1
163.00 - 168.99	UG18CD	4	FL18-M	1	GPT18-M	4	CUG14-M	1

UNIDEX Insert

See page 22 for grade and chipbreaker information

INSERTS

Type 1123

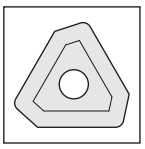

Dia. øDc (mm)	Peripheral Insert	qty	Inner Insert	qty		qty	Center Insert	qty
107.00 - 117.99	1123-43R	1	1123-32R	3	-		1123-43R	1
118.00 - 135.99	1123-43R	1	1123-43R	3	-		1123-43R	1
136.00 - 144.99	1123-43R	1	1123-43R	3	-		1123-63R	1
145.00 - 150.99	1123-43R	1	1123-43R	2	1123-63R	1	1123-63R	1
151.00 - 156.99	1123-63R	1	1123-43R	2	1123-63R	1	1123-63R	1
157.00 - 162.99	1123-63R	1	1123-43R	1	1123-63R	2	1123-63R	1
163.00 - 168.99	1123-63R	1	1123-63R	3	-		1123-63R	1

- For whole parts list, see page 35.
- Plus (+) spare parts will enlarge drill diameter up to 5mm depending on peripheral cartridge size. (see page 21 for details)
- Drill heads come complete with: cartridges, filler, guide pads, protectors, sub guide pad and wrenches - but less inserts.

UNIDEX DTS Outer Four Start Thread

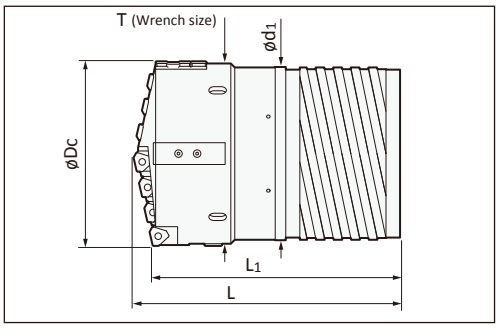

Drill Head Ordering Code	Diameter øDc (mm)	Number of Inserts	Outer Tube		Drill Head Dimensions (mm)			
			Ordering Code	Dia. (mm)	L	L1	d1	T
KUDTS24E-xx.xx	**169.00 - 171.99**	7	OT24	154	246	225	149	167
KUDTS25E-xx.xx	**172.00 - 183.99**	7	OT25	166	247	225	161	179

Ordering example for DIA=170.00mm : KUDTS24E-170.00
• Before drilling operation please adjust tool diameter. For diameter adjustment please see page 24.

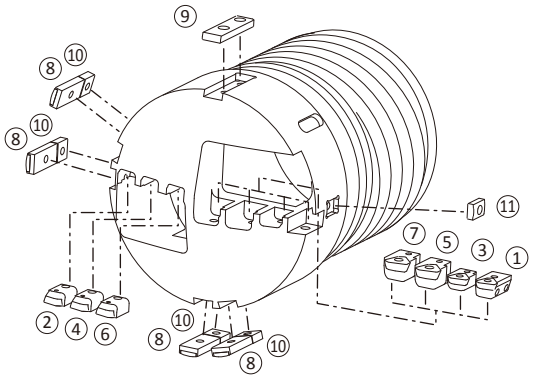

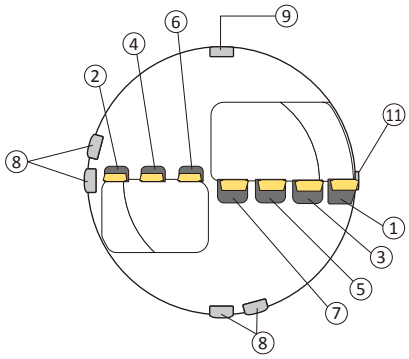

NOTE: According to diameter, some parts may not reflect the picture above

UNIDEX Spare Parts

See page 20 for screws and wrenches

PARTS

① Peripheral Cartridge

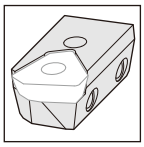

②③④⑤⑥ Inner Cartridge

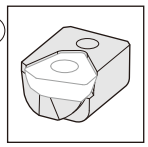

⑦ Center Cartridge

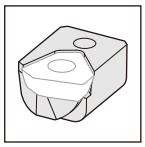

Dia. øDc (mm)	Peripheral ①	Inner ②	③	④	⑤	⑥	Center ⑦
169.00 - 183.99	OZ402-43	IOZ402-43	IOZ402-43	IOZ402-43	IOZ402-43	IOZ402-43	IOZ402-43

⑧ Guide Pad

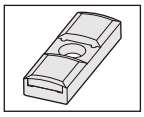

⑨ Filler

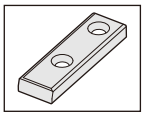

⑩ Protector

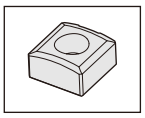

⑪ Sub Guide Pad

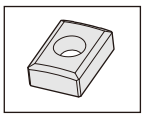

Dia. øDc (mm)	Guide Pad ⑧	qty	Filler ⑨	qty	Protector ⑩	qty	Sub Guide Pad ⑪	qty
169.00 - 183.99	UG18CD	4	FL18-M	1	GPT18-M	4	CUG14-M	1

UNIDEX Insert

See page 22 for grade and chipbreaker information

INSERTS

Type 1123

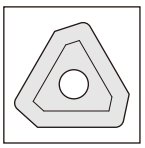

Dia. øDc (mm)	Peripheral Insert	qty	Inner Insert	qty	Center Insert	qty
169.00 - 183.99	1123-43R	1	1123-43R	5	1123-43R	1

- For whole parts list, see page 35.
- Plus (+) spare parts will enlarge drill diameter up to 5mm depending on peripheral cartridge size. (see page 21 for details)
- Drill heads come complete with: cartridges, filler, guide pads, protectors, sub guide pad and wrenches - but less inserts.

UNIDEX Parts List

Cartridge & Insert

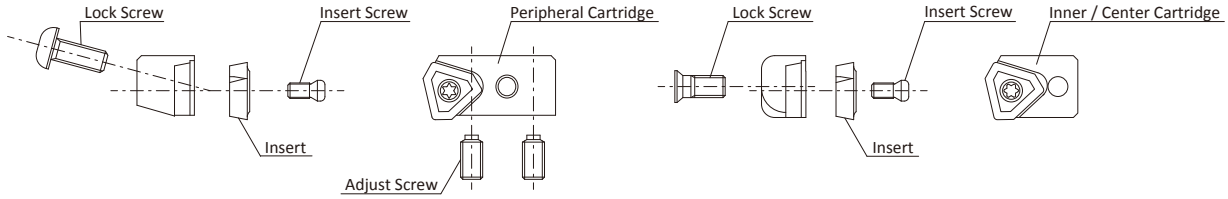

Peripheral

- Outer cartridges are supplied with adjust screws and insert screw but without inserts, lock screws and wrenchs
- Center and inner cartridges are supplied with insert screw but without inserts, lock screws and wrenchs

Cartridge	Insert	Insert Screw	Wrench	Adjust Screw	Wrench	Lock Screw	Wrench
OZ05R	508-05R	CSTB2.2	T-7D	AS0003-5	H1.5	LS1803RH	H2
OZ402-04	1123-04R	CSTB2.5	T-8D	AS0004-8	H2	LS1803.5RH	H2.5
OZ402-32	1123-32R	CSTB3.5D	T-9D	AS0005-10	H2.5	LS1805RH	H3
OZ402-43	1123-43R	CSTB4M	T-15D	AS0005-15	H2.5	LS1806RH	H4
OZ402-63	1123-63R	CSTB5	T-20D	AS0006-15	H3	LS1806RH	H4

Center & Inner

Cartridge	Insert	Insert Screw	Wrench	Lock Screw	Wrench
IOZ05R	508-05R	CSTB2.2	T-7D	CSTB3	T-9D
IOZ402-04	1123-04R	CSTB2.5	T-8D	CSTB3.5	T-15D
IOZ402-32	1123-32R	CSTB3.5D	T-9D	CSTA5	T-15D
IOZ402-43	1123-43R	CSTB4M	T-15D	LS1206	H3 / H3L**
IOZ402-63	1123-63R	CSTB5	T-20D	LS1206 / LS1206S*	H3 / H3L**

* LS1206S for center cartridge
** H3L for diameter ø151.00mm - ø320.00mm

Guide Pad & Protector

Guide Pad	Dimensions (mm)			Lock Screw	Wrench	Protector	Dimensions (mm)		Lock Screw	Wrench
	W	H	L				W	H		
UG08CD	8	4.5	25	CSTB3S	T-9D	GPT08	8	4.5	CSTB3S	T-9D
UG10CD	10	6	35	CSTB4S	T-15D	GPT10	10	6	CSTB4S	T-15D
UG14CD	14	7.5	40	CSTA5S	T-15D	GPT14	14	7.5	CSTA5S	T-15D
UG18CD	18	9	40	LS1206S / LS1206SSS ***	H3	GPT18-M	18	9	LS1206S	H3

*** LS1206SSS for dimensional guide pad (for diameter ø118.00 - ø150.99, ø169.00 - ø208.99 and ø233.00 - ø247.99 mm)
- Other carbide grades, coating and ceramic are available upon request.

Sub Guide

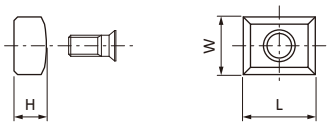

Guide Pad	Dimensions (mm)			Lock Screw	Wrench
	W	H	L		
CUG08	8	4.5	10	CSTB3S	T-9D
CUG10	10	5	10	CSTB3S	T-9D
CUG14-M	14	7	20	CSTA5S	T-15D

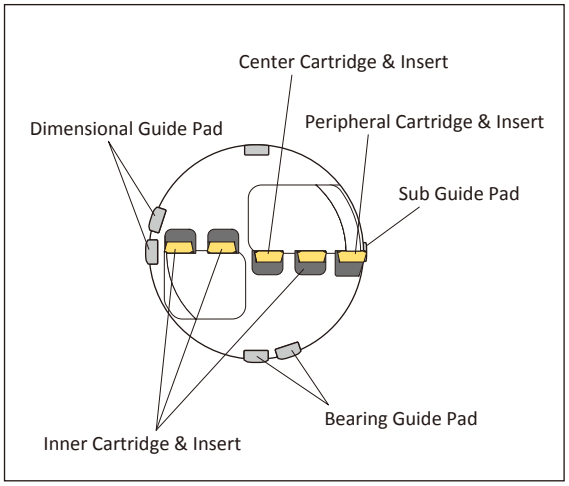

Plus Parts

One drill head can drill multiple size holes up to 5mm larger than nominal diameter. Enlargement size determined by peripheral cartridge. e.g. Drill heads using OZ402-32 peripheral cartridge can be enlarged up to 4mm, while drill heads using OZ402-43 can be enlarged up to 5mm.

NOTE: Not only peripheral cartridge but also guide pad must be used when enlarging the drill head diameter

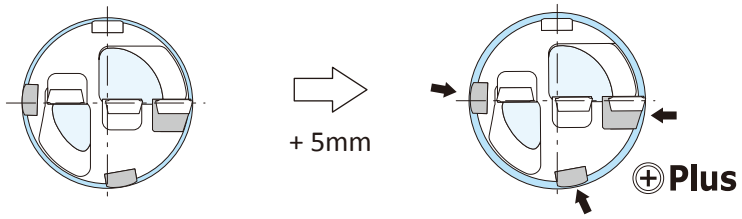

Peripheral Cartridge	OZ402-43
Guide Pad	UG14CD

Peripheral Cartridge	OZ402-43+5
Guide Pad	UG14+5CD

Plus

Plus Cartridge - OZ type

	+1mm	+2mm	+3mm	+4mm	+5mm
OZ05R	OZ05R+1 ●	OZ05R+2 ●	-	-	-
OZ402-04	OZ402-04+1 ●	OZ402-04+2 ●	OZ402-04+3 ●	-	-
OZ402-32	OZ402-32+1 ●	OZ402-32+2 ●	OZ402-32+3 ●	OZ402-32+4 ●	-
OZ402-43	OZ402-43+1 ●	OZ402-43+2 ●	OZ402-43+3 ●	OZ402-43+4 ●	OZ402-43+5 ●
OZ402-63	OZ402-63+1 ●	OZ402-63+2 ●	OZ402-63+3 ●	OZ402-63+4 ●	OZ402-63+5 ●

Ordering example: OZ402-04+2 10 pcs

Plus

Plus Cartridge - OX type

• OX cartridge is for reaming (close tolerance) and interchangable in the same pocket as OZ cartridge

	+1mm	+2mm	+3mm	+4mm	+5mm
OX32R	OX32R+1 ○	OX32R+2 ○	OX32R+3 ○	OX32R+4 ○	-
OX43R	OX43R+1 ○	OX43R+2 ○	OX43R+3 ○	OX43R+4 ○	OX43R+5 ○
OX63R	OX63R+1 ○	OX63R+2 ○	OX63R+3 ○	OX63R+4 ○	OX43R+5 ○

Ordering example: OX32R+2 10 pcs

Plus

Plus Guide Pad

	+1mm	+2mm	+3mm	+4mm	+5mm
UG08CD	UG08+1CD ●	UG08+2CD ●	UG08+3CD ●	-	-
UG10CD	UG10+1CD ●	UG10+2CD ●	UG10+3CD ●	UG10+4CD ●	-
UG14CD	UG14+1CD ●	UG14+2CD ●	UG14+3CD ●	UG14+4CD ●	UG14+5CD ●
UG18CD	UG18+1CD ●	UG18+2CD ●	UG18+3CD ●	UG18+4CD ●	UG18+5CD ●

Ordering example: UG08+2CD 10 pcs

● : Standard stock item
○ : Non-standard stock item

UNIDEX Insert

1123 Type

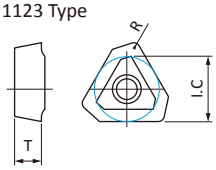

508 Type

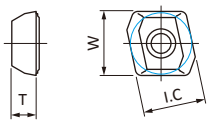

(Patent No 2702061)

Chipbreaker	Code	Dimensions (mm)				Grade						
						CVD coating			PVD coating			
		IC	T	R	W	UC1220 (DLX2)	UC1125 (DLXT)	UC1230 (DLX3)	UC3215 (KLX2)	UC3210 (KLXT3)	UC2220 (NLX)	UC3120 (KLXT)
G	508-05R	8.00	3.18	-	8.362			●	●		●	
	1123-04R	8.45	3.50	0.8	-	●		●	●		●	
	1123-32R	10.30	4.00	0.8	-	●		●	●		●	
	1123-43R	14.20	5.50	1.2	-	●		●	●		●	
	1123-63R	17.00	7.50	1.6	-	●		●	●		●	
BR1	508-05RBR1	8.00	3.18	-	8.362		●				●	●
	1123-04RBR1	8.45	3.50	0.4	-		●			●	●	●
	1123-32RBR1	10.30	4.00	0.4	-		●			●	●	●
	1123-43RBR1	14.20	5.50	0.4	-		●			●	●	●
	1123-63RBR1	17.00	7.50	0.8	-		●			●	●	●
B	1123-32RB	10.30	4.00	0.8	-				●		●	
	1123-43RB	14.20	5.50	1.2	-				●		●	
	1123-63RB	17.00	7.50	1.6	-				●		●	
S	1123-04RS	8.45	3.50	0.8	-						●	
	1123-32RS	10.30	4.00	0.8	-						●	
	1123-43RS	14.20	5.50	1.2	-						●	
	1123-63RS	17.00	7.50	1.6	-						●	

Left hand type

G	1123-04L	8.45	3.50	0.8	-			●			●	
	1123-32L	10.30	4.00	0.8	-			●			●	
	1123-43L	14.20	5.50	1.2	-			●			●	
	1123-63L	17.00	7.50	1.6	-			●			●	
B	1123-32LB	10.30	4.00	0.8	-						●	
	1123-43LB	14.20	5.50	1.2	-						●	
	1123-63LB	17.00	7.50	1.6	-						●	
S	1123-32LS	10.30	4.00	0.8	-						●	
	1123-43LS	14.20	5.50	1.2	-						●	

Ordering example: 1123-04RBR1 UC1125 10 pcs

● : Standard stock item

Chipbreaker

G

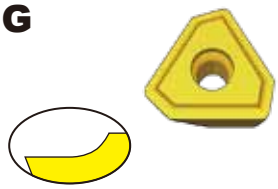

Good chip control with most materials

BR1

Good chip control with heat resistant super alloy

B

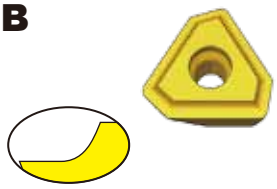

Good chip control with long chipping materials

S

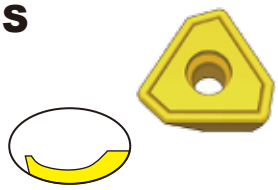

Good for lowering cutting resistance

Grade

	Grade (previous name)	ISO area 5	10	15	20	25	30	35	40
P	UC1220 (DLX2)								
	UC2220 (NLX)								
	UC1125 (DLXT)								
	UC1230 (DLX3)								
	UC3120 (KLXT)								
M	UC2220 (NLX)								
	UC1230 (DLX3)								
	UC3120 (KLXT)								
K	UC3215 (KLX2)								
	UC3120 (KLXT)								
N	UC3215 (KLX2)								
	UC2220 (NLX)								
S	UC3210 (KLXT3)								
	UC2220 (NLX)								
	UC3120 (KLXT)								
	UC1230 (DLX3)								

New designation system for insert grades.

UNIDEX Insert Selection Chart

Chipbreaker Grade

Workpiece material		First Recommendation	Troubleshooting	
			Chipping	Wear
P	Low carbon steels (C < 0.3) • SS400, SM490, S25C	G UC2220 (NLX)	G UC1230 (DLX3)	G UC1220 (DLX2)
	Carbon steels (C > 0.3) • S45C, S55C	G UC2220 (NLX)	G UC1230 (DLX3)	G UC1220 (DLX2)
	Low alloy steels • SCM415	G UC2220 (NLX)	G UC1230 (DLX3)	G UC1220 (DLX2)
	Alloy steels • SCM440, SCr420	G UC2220 (NLX)	G UC1230 (DLX3)	G UC1220 (DLX2)
M	Stainless steels (Austenite) • SUS304, SUS316	G UC2220 (NLX)	BR1 UC3120 (KLXT)	BR1 UC3210 (KLXT3)
	Stainless steels (Martensite, Ferritic) • SUS430, SUS416	G UC2220 (NLX)	BR1 UC3120 (KLXT)	BR1 UC3210 (KLXT3)
	Stainless steels (Precipitation hardened) • SUS630	G UC2220 (NLX)	BR1 UC3120 (KLXT)	BR1 UC3210 (KLXT3)
K	Gray cast irons • FC250	G UC2220 (NLX)	G UC1230 (DLX3)	G UC3215 (KLX2)
	Nodular cast irons • FCD700	G UC2220 (NLX)	G UC1230 (DLX3)	G UC3215 (KLX2)
N	Aluminium alloys • A2017, ADC12	G UC2220 (NLX)	BR1 UC3120 (KLXT)	G UC3215 (KLX2)
S	Heat resistant super alloys	BR1 UC2220 (NLX)	BR1 UC3120 (KLXT)	BR1 UC3210 (KLXT3)
	Titanium alloys	BR1 UC2220 (NLX)	BR1 UC3120 (KLXT)	BR1 UC3210 (KLXT3)

UNIDEX Diameter Setting

The Drill Head diameter is set and inspected with a master insert in our final inspection. However, the inserts in the market have a tolerance fluctuation so each time you change or index the insert, the diameter must be adjusted as per the following method.

> ⚠ When a corner change is made on the insert, it must be adjusted to correct size or a damage can be caused to the head body or a work piece material.

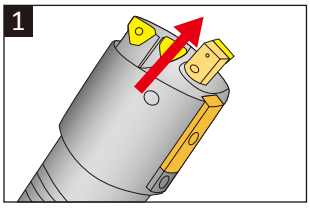

1 Remove the inner cartridge to avoid interference with the guide screw.

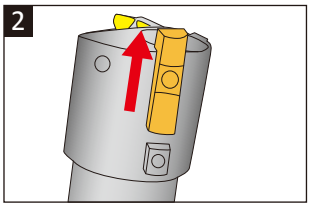

2 The dimensional guide pad must be slid forward to measure the diameter.

- **2-1** Loosen the lock screw and slide the guide pad forward.
- **2-2** Retighten the lock screw at the measuring position.

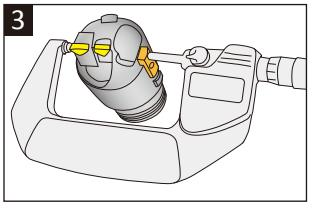

3 Measure the diameter with a micrometer.

We recommend setting the tool diameter at h8 tolerance to the cutting diameter.

If the diameter is incorrect, go to below step **4**

If it's correct, go to below step **5**

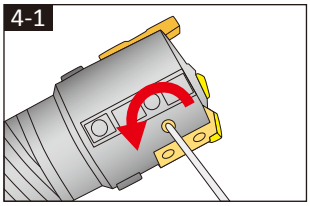

4 Adjust the peripheral cartridge

- **4-1** First loosen the lock screw of the peripheral cartridge and then tighten it slightly.

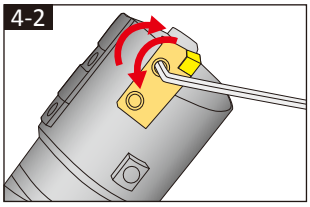

- **4-2** Proceed to adjust the diameter, using the 2 adjust screws and measure with a micrometer.

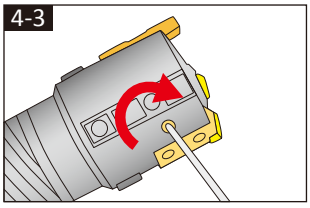

- **4-3** When set to the size, retighten the lock screw.
- **4-4** Recheck the diameter with a micrometer. If it is still out of tolerance, repeat the procedure from the step **4-1**

> ⚠ Please make sure to tighten the lock screw firmly before using. If loose, the cartridge may move and cause serious problems during machining.

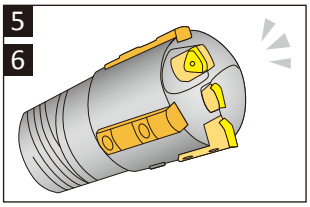

5 Slide the dimensional guide pad back to the original position and tighten the lock screw.

6 Replace the inner cartridge and tighten the lock screw.

> ⚠ Please check all the lock screws are firmly tightened as they may come loose if vibration occurs during drilling.

Top Guide Pad / Replacing Guide Pads

Top Guide Pad

Please replace the filler with a top guide pad in below cases.

- ▶ High hole accuracy is required
- ▶ L/D (Hole Length / Diameter) is more than 50
- ▶ Drilling a workpiece which has a tail stock hole
- ▶ DOC is more than the range of peripheral insert for counterboring * (see chart below)

* Maximum DOC of peripheral insert

Cartridge	DOC (mm)
OZ402-04	6.4
OZ402-32	7.2
OZ402-43	10.4
OZ402-63	12.0

• For diameter less than 92mm, the drill head is semi standard using the top guide pad. Please contact our sales office.

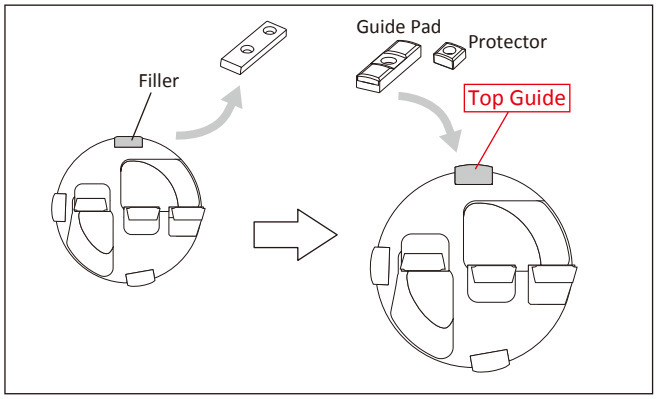

Replacing Guide Pads

The guide pad is a consumable item as well as the insert

The UNIDEX guide pad has 2corners.
When the wear comes to 2nd corner, reverse the guide pad.
When the 2nd corner also gets worn, replace the guide pad with a new one.

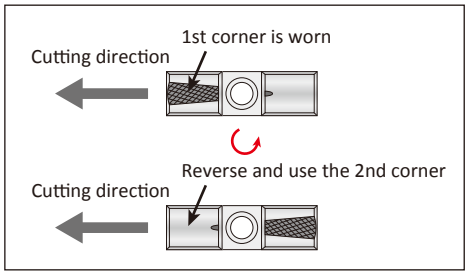

Advanced Technique

Indexable Counterboring Head is the first recommendation for counterboring, but UNIDEX can be used under below conditions.

1 Small depth of cut (DOC)

Please use OX type as the peripheral cartridge.

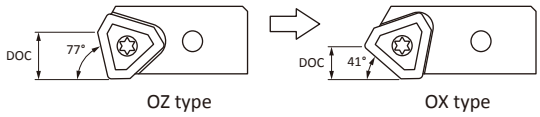

Please use a left hand type insert with a OX cartridge.

Cartridge	DOC (mm)	Insert	Cartridge	DOC (mm)	Insert
OZ402-04	6.4	1123-04R	OX04R	4.0	1123-04L
OZ402-32	7.2	1123-32R	OX32R	4.8	1123-32L
OZ402-43	10.4	1123-43R	OX43R	6.4	1123-43L
OZ402-63	12.0	1123-63R	OX63R	7.6	1123-63L

2 Depth of cut (DOC) is more than peripheral insert range

When DOC exceeds the cutting area of the peripheral insert, the drill head may be unstable. In such cases replace the filler with a top guide pad.

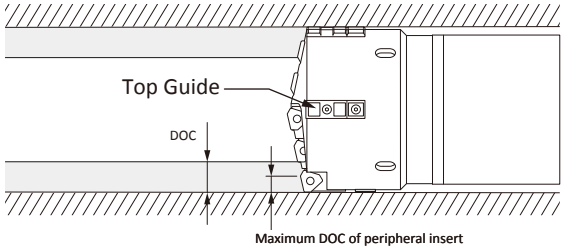

⚠ This is only for expert users. Please use this technique at your own risk.

Cutting Resistance, Oil Pressure, Oil Quantity (STS)

Net Power

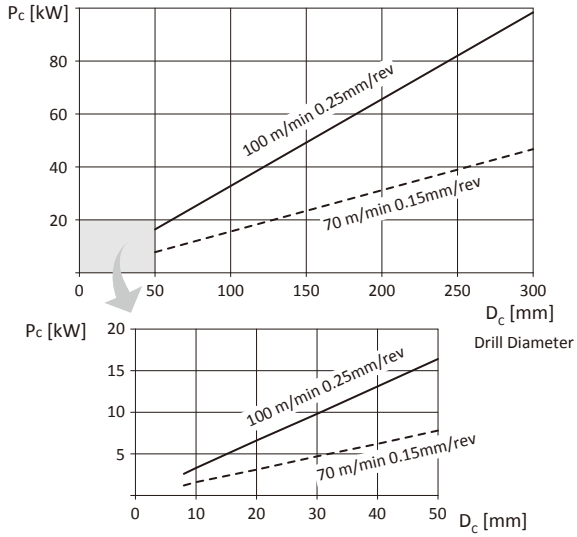

Feed Force

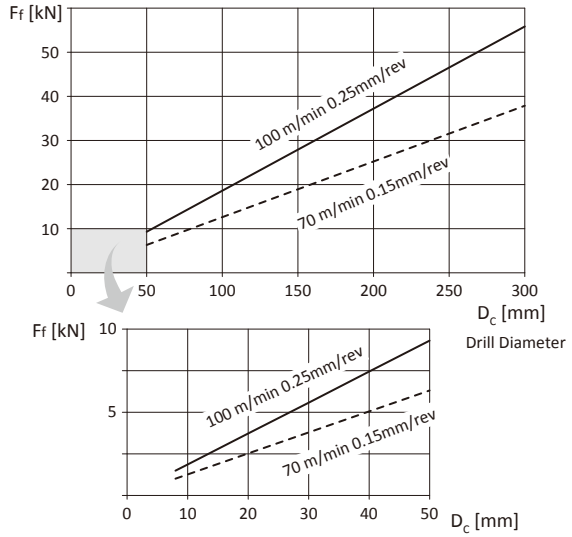

Torque

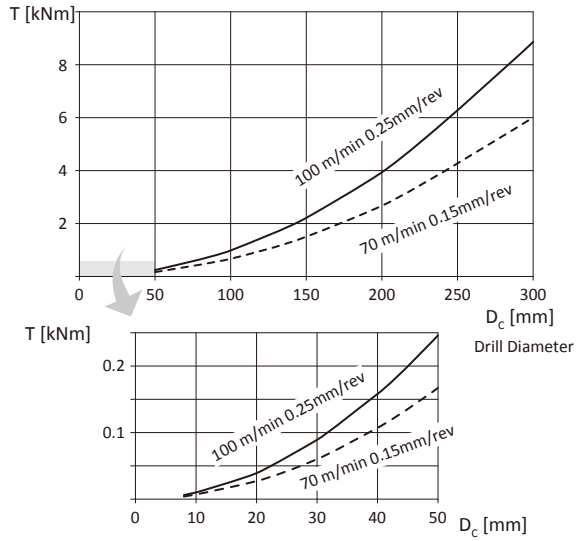

STS
Single Tube System

Cutting Fluid Pressure

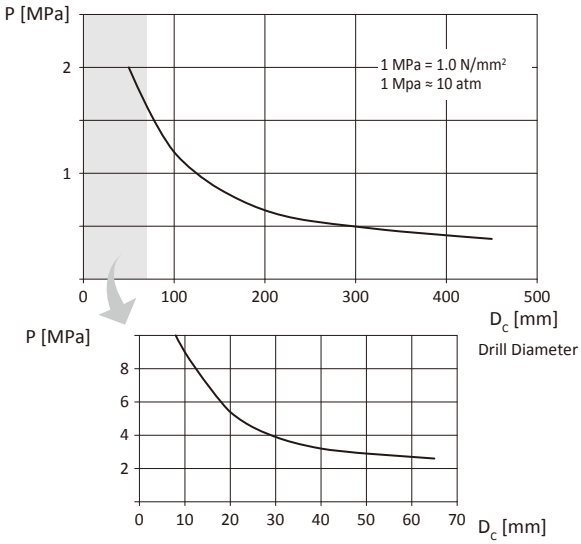

Cutting Fluid Volume

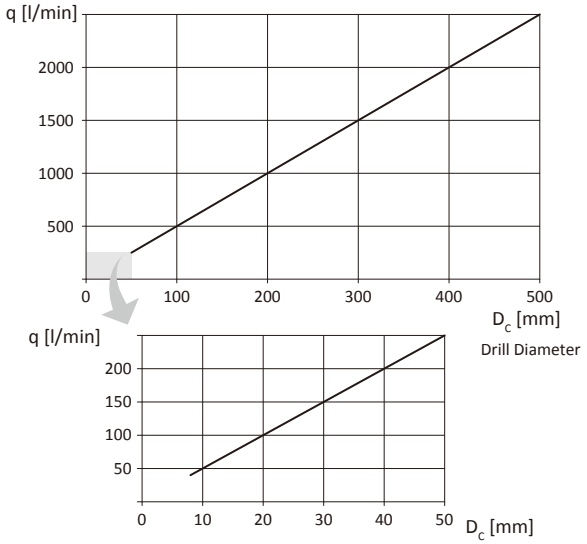

Cutting Resistance, Oil Pressure, Oil Quantity (DTS)

Net Power

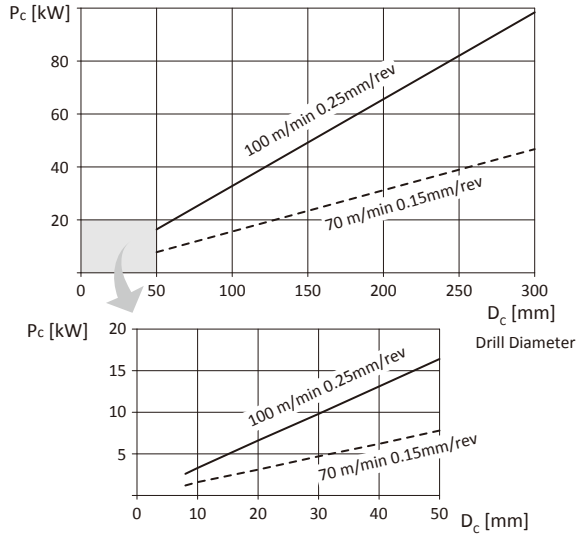

Feed Force

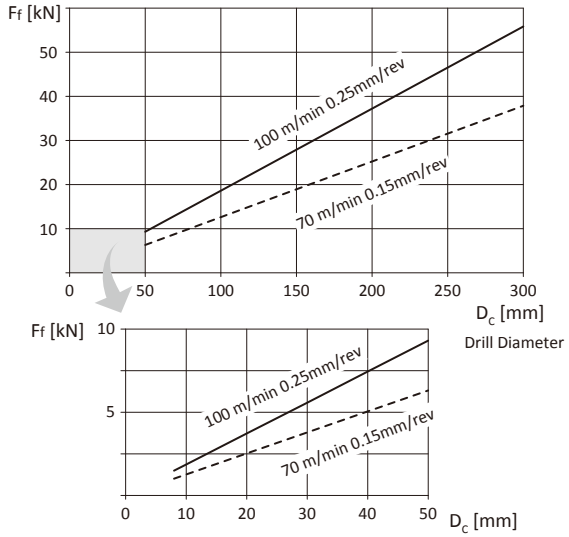

DTS

Double Tube System

Torque

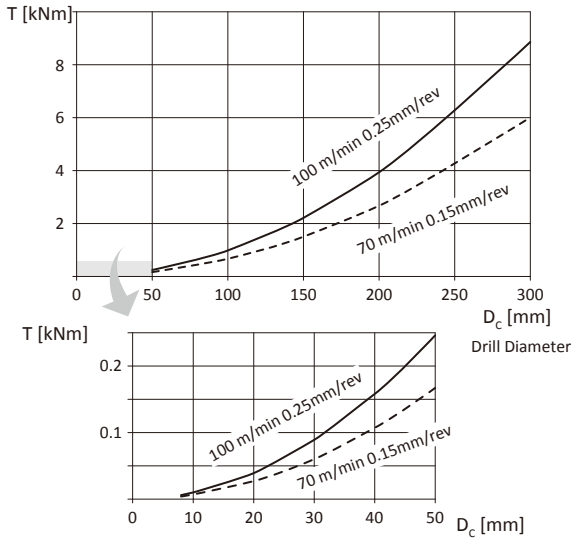

Cutting Fluid Pressure

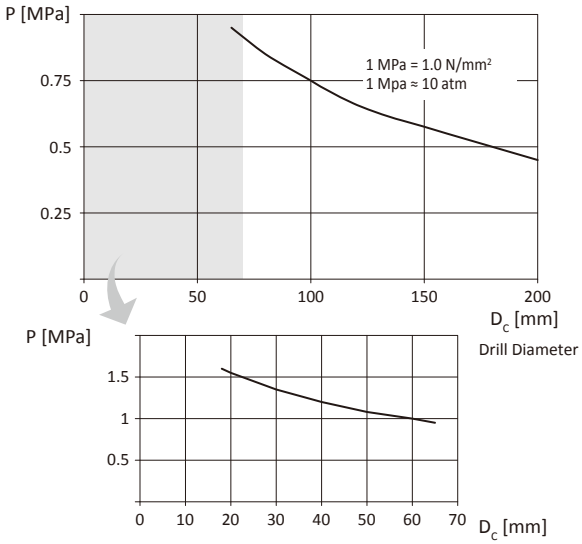

Cutting Fluid Volume

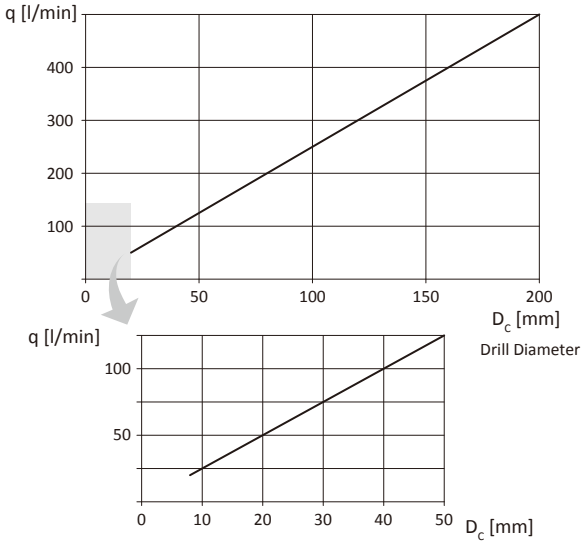

Recommended Cutting Conditions

ISO	Material	JIS	Condition		Hardness (HB)	Cutting Speed Vc (m/min)	Feed rate fn (mm/rev) Drill Dia. (mm) 38.00 - 39.99	40.00 - 51.99	52.00 - 63.99	64.00 - 84.99	85.00 -
P	Carbon steel High carbon Cutting steel	S10C - S25C, SS	0.1 - 0.25 %C	Non-hardened	125	60-120	0.08-0.15	0.1-0.2	0.13-0.23	0.15-0.25	0.18-0.3
		S25C - S55C	0.25 - 0.25 %C	Non-hardened	190	60-120	0.08-0.15	0.1-0.2	0.13-0.23	0.15-0.25	0.18-0.3
			0.25 - 0.25 %C	Hardened and tempered	250	60-120	0.08-0.15	0.1-0.2	0.13-0.23	0.15-0.25	0.18-0.3
		SK	0.55 - 0.80 %C	Non-hardened	220	60-120	0.08-0.15	0.1-0.2	0.13-0.23	0.15-0.25	0.18-0.3
			0.55 - 0.80 %C	Hardened and tempered	300	60-120	0.08-0.15	0.1-0.2	0.13-0.23	0.15-0.25	0.18-0.3
	Low alloyed (alloying element < 5%)	SNC,DCr, SNCN SCM, SMn		Non-hardened	200	60-100	0.08-0.15	0.1-0.2	0.13-0.23	0.15-0.25	0.18-0.3
				Hardened and tempered	275	60-100	0.08-0.15	0.1-0.2	0.13-0.23	0.15-0.25	0.18-0.3
					300	50-100	0.08-0.15	0.1-0.2	0.13-0.23	0.15-0.25	0.18-0.3
					350	50-100	0.08-0.15	0.1-0.2	0.13-0.23	0.15-0.25	0.18-0.3
	High alloyed Cast iron Tool steel	SNS,SKD, SKT SKH, SK		Non-hardened	200	60-120	0.08-0.15	0.1-0.2	0.13-0.23	0.15-0.25	0.18-0.3
				Hardened and tempered	325	60-120	0.08-0.15	0.1-0.2	0.13-0.23	0.15-0.25	0.18-0.3
M	Stainless steel	SUS430		Ferritic	200	60-110	0.08-0.15	0.1-0.2	0.13-0.23	0.15-0.25	0.18-0.3
		SUS410, 420J		Martensite	240	60-110	0.08-0.15	0.1-0.2	0.13-0.23	0.15-0.25	0.18-0.3
		SUS304, SUS316L		Austenite	180	60-110	0.08-0.15	0.1-0.2	0.13-0.23	0.15-0.25	0.18-0.3
K	Nodular cast iron	FCD400 - FCD450		Ferritic/Pearlitic	180	60-100	0.08-0.13	0.1-0.15	0.13-0.18	0.15-0.2	0.18-0.23
		FCD500 - FCD700		Pearlitic	260	60-100	0.08-0.13	0.1-0.15	0.13-0.18	0.15-0.2	0.18-0.23
	Gray cast iron	FC100 - FC200		Low tensile strength	160	60-100	0.08-0.13	0.1-0.15	0.13-0.18	0.15-0.2	0.18-0.23
		FC250 - FC350		High tensile strength	250	60-100	0.08-0.13	0.1-0.15	0.13-0.18	0.15-0.2	0.18-0.23
	Malleable cast iron	FCMB, FCMW		Ferritic	130	60-100	0.08-0.13	0.1-0.15	0.13-0.18	0.15-0.2	0.18-0.23
		FCMWP, FCMP		Pearlitic	230	60-100	0.08-0.13	0.1-0.15	0.13-0.18	0.15-0.2	0.18-0.23
N	Aluminum alloy Forging			Non-aged	60	60-130	0.08-0.2	0.1-0.25	0.13-0.28	0.15-0.3	0.18-0.33
				Soluted, Aged	100	60-130	0.08-0.2	0.1-0.25	0.13-0.28	0.15-0.3	0.18-0.33
	Aluminum alloy Casting		<=12% Si	Non-aged	75	60-130	0.08-0.2	0.1-0.25	0.13-0.28	0.15-0.3	0.18-0.33
				Soluted, Aged	90	60-130	0.08-0.2	0.1-0.25	0.13-0.28	0.15-0.3	0.18-0.33
			>12% Si	High silicon	130	60-130	0.08-0.2	0.1-0.25	0.13-0.28	0.15-0.3	0.18-0.33
	Copper alloy		>1% Pb	Free cutting copper	110	60-130	0.08-0.2	0.1-0.25	0.13-0.28	0.15-0.3	0.18-0.33
				Brass, Red brass	90	60-130	0.08-0.2	0.1-0.25	0.13-0.28	0.15-0.3	0.18-0.33
				Electrolytic copper	100	60-130	0.08-0.2	0.1-0.25	0.13-0.28	0.15-0.3	0.18-0.33
S	Heat resistant super alloy		Fe base	Non-aged	200	20-65	0.08-0.15	0.1-0.2	0.13-0.23	0.15-0.25	0.18-0.3
				Soluted, Aged	280	20-65	0.08-0.15	0.1-0.2	0.13-0.23	0.15-0.25	0.18-0.3
			Ni / Co base	Non-aged	250	20-65	0.08-0.15	0.1-0.2	0.13-0.23	0.15-0.25	0.18-0.3
				Soluted, Aged	350	20-65	0.08-0.15	0.1-0.2	0.13-0.23	0.15-0.25	0.18-0.3
				Casted	320	20-65	0.08-0.15	0.1-0.2	0.13-0.23	0.15-0.25	0.18-0.3
	Titanium alloy		α		Rm400	30-100	0.08-0.15	0.1-0.2	0.13-0.23	0.15-0.25	0.18-0.3
			α - β		Rm1050	30-100	0.08-0.15	0.1-0.2	0.13-0.23	0.15-0.25	0.18-0.3

The above values should not be used as the exact recommendations. They may need modification depending on the machining conditions, materials, etc.

Machine Setting Up

Notes for Setting Up STS and DTS Systems

Workpiece rotating system

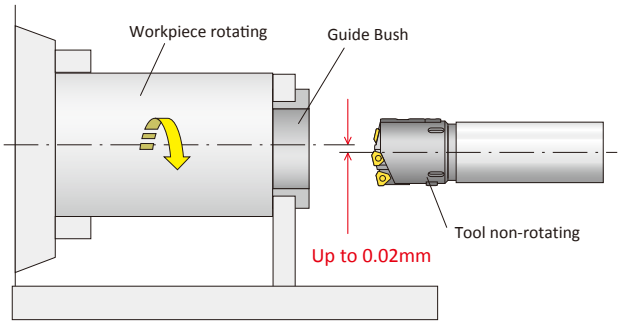

- Should be applied only when the workpiece and the tool axis are in line.
- Better result is expected for hole straightness and wear-resistance of the guide bush compared to tool rotating system.
- Keep the alignment between guide bush and spindle within 0.02 mm.

Tool rotating system

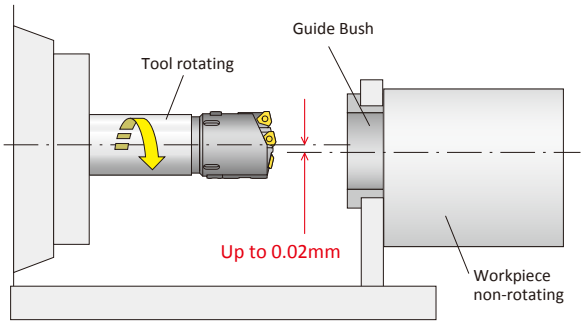

- Can be applied when the workpiece and the tool axis are not in line.
- Keep the alignment between guide bush and spindle within 0.02 mm.

Notes for Setting Up DTS System

Positioning of outer tube and guide bush

Be sure to set the outer tube into the guide bush by more than 5.00 mm so that the coolant will be supplied properly

Positioning of work material and guide bush

Sealing is not required for DTS system because of the vacuum effect, but be sure to keep the gap between the work material and the guide bush 1.0 mm or less.

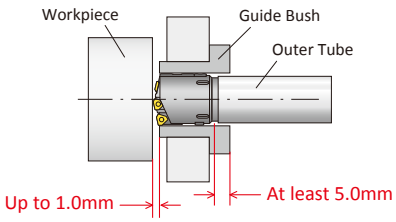

Guide Bush

Guide bush size

Guide bush tolerance should be G6 in order to keep good tool life and cutting accuracy.

D (mm)	G6 Tolerance (mm)
18.01 - 30.00	+0.007 ~ +0.020
30.01 - 50.00	+0.009 ~ +0.025
50.01 - 80.00	+0.010 ~ +0.029
80.01 - 120.00	+0.012 ~ +0.034
120.01 - 180.00	+0.014 ~ +0.039
180.01 - 250.00	+0.015 ~ +0.044
250.01 - 315.00	+0.017 ~ +0.049

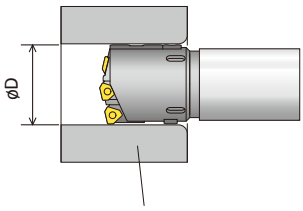

Guide bush material

Guide Bush Material	Method	Advantage
Hardened steel	Workpiece rotating	Economical
Carbide	Tool rotating Workpiece rotating	Long life of guide bush

Coolant Management

Coolant temperature

The suitable coolant temperature is 30 to 40 °C (90 - 100 °F).
If it exceeds this temperature, the coolant will deteriorate which will cause short tool life and poor surface finish.

Coolant filtration

The coolant must be filtered in order to protect the guide pads and the surface finish.

Using water-soluble coolant

The concentration of water-soluble coolant is recommended to be around 10 % (dilution rate 1/10) in order to protect the guide pads.

Insert Wear Trouble Shooting

Cutting Edge Trouble Examples

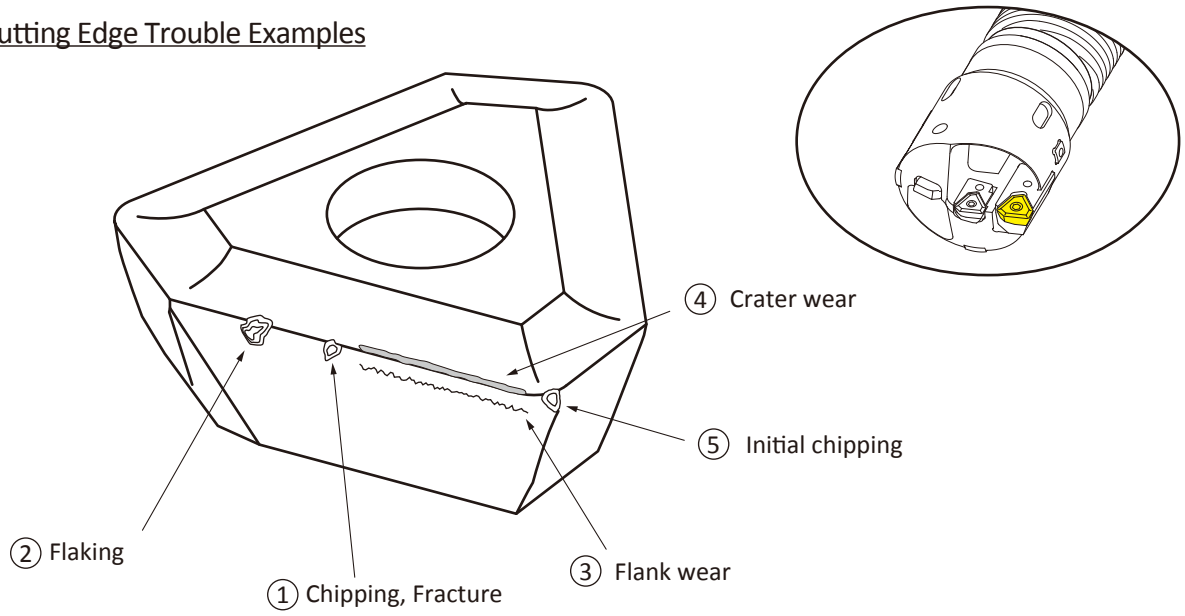

(Peripheral Insert)

	Problem	Causes	Solutions	
			Grade	Cutting Conditions / Other
1	Chipping, Fracture	• Excessive vibration or shock • Built-Up-Edge separated	• Use tougher grade	• Reduce feed rate • Remove vibration
2	Flaking	• Excessive vibration or shock	• Use tougher grade	• Reduce feed rate • Remove vibration
3	Flank wear	• Cutting speed too high • Inadequate tool toughness	• Use higher wear resistant grade • Use coated grade	• Reduce cutting speed • Reduce feed rate • Use proper cutting fluid
4	Crater wear	• Cutting speed too high • Feed rate too high • Inadequate tool toughness	• Use higher wear resistant grade • Use coated grade	• Reduce cutting speed • Reduce feed rate • Use proper cutting fluid
5	Initial chipping	• Guide bush or pilot hole is improper size • Misalignment	• Use tougher grade	• Adjust or change guide bush or pilot hole • Reduce feed rate • Correct misalignment

Cutting condition and chip form

Chip formation in deep hole drilling

Chip formation plays a key role as well as the management of cutting fluid temperature and volume in STS (Single Tube System) and DTS (Double Tube System) which enable deep hole drilling by supplying cutting fluid of large volume and high pressure. As chips are evacuated through tube with cutting fluid in deep hole drilling, smooth and steady chip evacuation can be achieved by proper chip formation.

Chip formation

Chip formation is affected by multiple factors such as work material, chipbreaker geometry, cutting speed, feed, type of cutting fluid and cutting fluid temperature. Suitable chip formation depends on cutting situation but is controllable by changing the cutting conditions.

How to decide chip form

Generally chip length should be 3 - 4 times width, but it tends to be longer with difficult-to-cut materials in which case it is better to make chips thinner (reduce feed) so that smooth chip evacuation is obtained.

Below picture shows chip formation by cutting speed and feed. Shorter chips are obtained by reducing cutting speed or increasing feed.

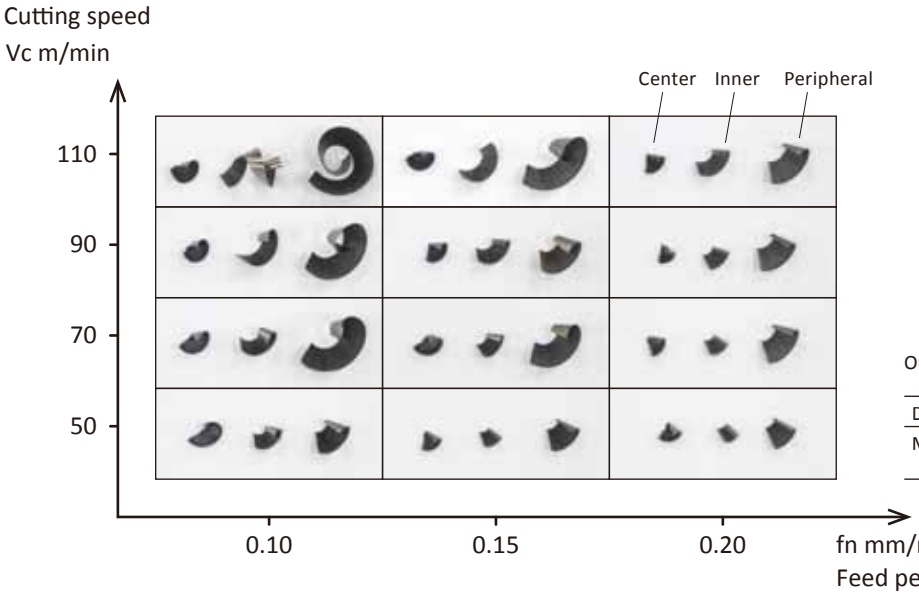

Our in-house test result

Diameter :	ø30.00mm
Material :	Low alloy steel AISI4340

From left to right in each box the order is center, inner and peripheral chip.

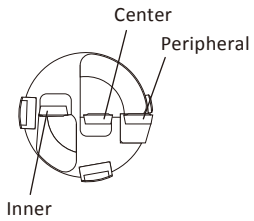

Calculation of special length tube

Drill tubes with other length than standard item are available upon request.
Please calculate the tube length as below according to your machine.

ST Four start / Two start* Inner thread connection

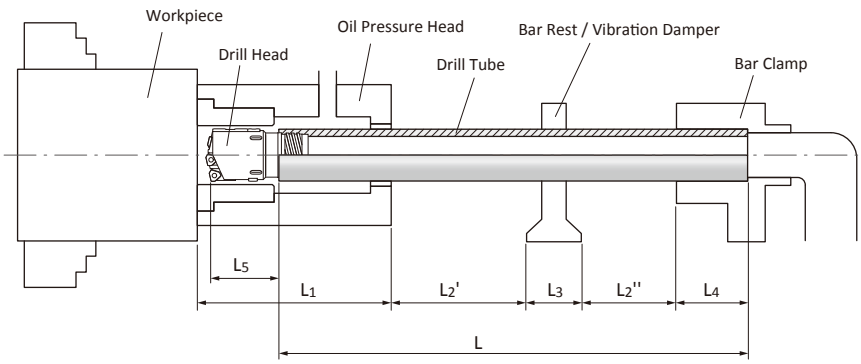

L = Drill tube length
L1 = Oil pressure head length
L2 = Drilling depth (L2' + L2'')
L3 = Bar rest / vibration damper length
L4 = Drill tube clamping length
L5 = End of drill tube to tip of peripheral insert

Drill Tube Length L = L1 + L2 + L3 + L4 - L5

UNIDEX

Dia. øDc (mm)			L5 (mm)
38.00	-	43.00	45
43.01	-	51.70	55
51.71	-	56.20	56
56.21	-	65.00	66
65.00	-	79.99	75
80.00	-	111.99	83
112.00	-	147.99	87
148.00	-	183.99	86
184.00	-	255.99	101
256.00	-	291.99	106

* Two start thread is for dia 15.59 and less.

UB Single start Outer thread connection

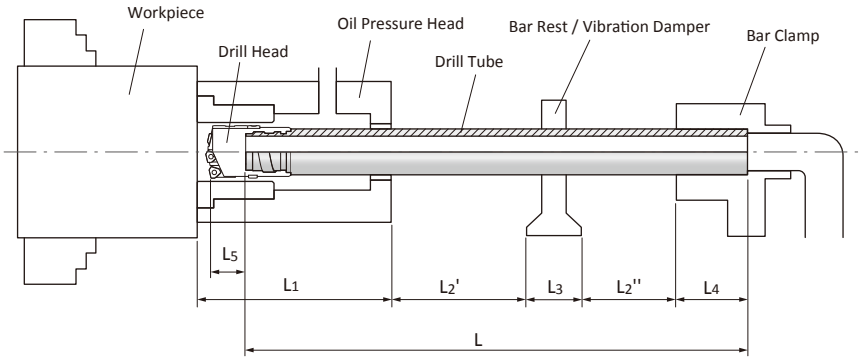

L = Drill tube length
L1 = Oil pressure head length
L2 = Drilling depth (L2' + L2'')
L3 = Bar rest / vibration damper length
L4 = Drill tube clamping length
L5 = End of drill tube to tip of peripheral insert

Drill Tube Length L = L1 + L2 + L3 + L4 - L5

UNIDEX

Dia. øDc (mm)			L5 (mm)
38.00	-	43.99	40
44.00	-	51.99	50
52.00	-	56.99	60
57.00	-	67.99	70
68.00	-	161.99	80
162.00	-	257.99	105
258.00	-	293.99	90

Calculation of special length tube

OT & IT

DTS Double Tube System

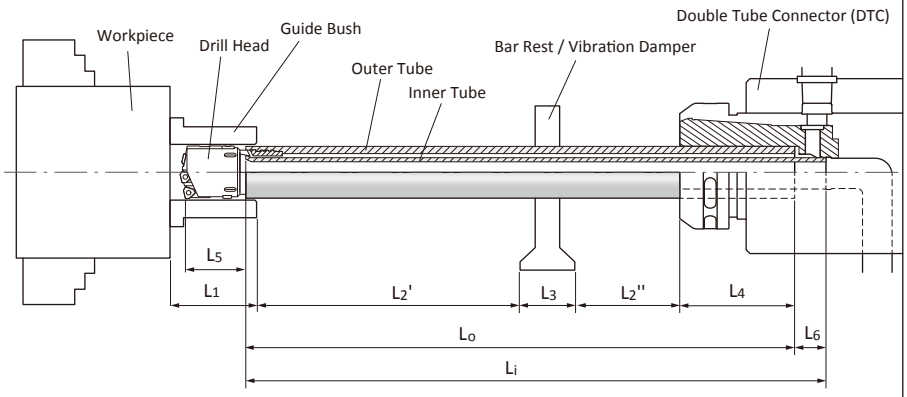

L_o = Outer tube length
L_i = Inner tube length
L_1 = Guide bush length (or pilot hole depth)
L_2 = Drilling depth (L_2' + L_2'')
L_3 = Bar rest / vibration damper length
L_4 = Outer tube length in connector *
L_5 = End of drill tube to tip of peripheral insert
L_6 = Difference between outer tube length and inner tube length**

Outer Tube Length $L_o = L_1 + L_2 + L_3 + L_4 - L_5$

Inner Tube Length $L_i = L_o + L_6$

(mm)

DTC type	L_4 *	L_6 **
DTC 4R (for OT00 - OT13)	120	30
DTC 5R (for OT14 - OT20)	0	190
DTC 6R (for OT21 - OT25)	0	220

• Set the outer tube into the guide bush by more than 5.00mm.

UNIDEX

Dia. øDc (mm)			L_5 (mm)
38.00	-	43.00	45
43.01	-	47.00	55
47.01	-	51.70	51
51.71	-	56.20	56
56.21	-	65.00	66
65.00	-	79.99	75
80.00	-	111.99	83
112.00	-	147.99	87
148.00	-	183.99	86

UNIDEX Spare Parts Chart

ø38.00 - 106.99 mm

DIA mm	Cartridge						Guide Pad						Insert					
	Qty Peripheral Cartridge		Qty Inner Cartridge		Qty Center Cartridge		Qty Guide Pad		Qty Protector		Qty Sub Guide Pad		Qty Peripheral Insert		Qty Inner Insert		Qty Center Insert	
	Adjust Screw	Wrench	Lock Screw	Wrench	Lock Screw	Wrench	Lock Screw	Wrench	Lock Screw	Wrench	Lock Screw	Wrench	Insert Screw	Wrench	Insert Screw	Wrench	Insert Screw	Wrench
	Lock Screw	Wrench					Filler Lock Screw	Wrench										
38.00 - 39.99	1 OZ05R		1 IOZ05R		1 IOZ05R		2 UG08CD		2 GPT08		1 CUG08		1 508-05		1 508-05		1 508-05	
	2 AS0003-5	H1.5	1 CSTB3	T-9D	1 CSTB3	T-9D	2 CSTB3S	T-9D	2 CSTB3S	T-9D	1 CSTB3S	T-9D	1 CSTB2.2	T-7D	1 CSTB2.2	T-7D	1 CSTB2.2	T-7D
	1 LS1803RH	H2					-											
							-											
40.00 - 44.99	1 OZ402-04		1 IOZ05R		1 IOZ05R		2 UG08CD		2 GPT08		1 CUG08		1 1123-04		1 508-05		1 508-05	
	2 AS0004-8	H2	1 CSTB3	T-9D	1 CSTB3	T-9D	2 CSTB3S	T-9D	2 CSTB3S	T-9D	1 CSTB3S	T-9D	1 CSTB2.5	T-8D	1 CSTB2.2	T-7D	1 CSTB2.2	T-7D
	1 LS1803.5RH	H2.5					-											
							-											
45.00 - 47.99	1 OZ402-04		1 IOZ05R		1 IOZ402-04		2 UG10CD		2 GPT10		1 CUG08		1 1123-04		1 508-05		1 1123-04	
	2 AS0004-8	H2	1 CSTB3	T-9D	1 CSTB3.5	T-15D	2 CSTB4S	T-15D	2 CSTB4S	T-15D	1 CSTB3S	T-9D	1 CSTB2.5	T-8D	1 CSTB2.2	T-7D	1 CSTB2.5	T-8D
	1 LS1803.5RH	H2.5					-											
							-											
48.00 - 51.99	1 OZ402-04		1 IOZ402-04		1 IOZ402-04		2 UG10CD		2 GPT10		1 CUG08		1 1123-04		1 1123-04		1 1123-04	
	2 AS0004-8	H2	1 CSTB3.5	T-15D	1 CSTB3.5	T-15D	2 CSTB4S	T-15D	2 CSTB4S	T-15D	1 CSTB3S	T-9D	1 CSTB2.5	T-8D	1 CSTB2.5	T-8D	1 CSTB2.5	T-8D
	1 LS1803.5RH	H2.5					-											
							-											
52.00 - 54.99	1 OZ402-32		1 IOZ402-04		1 IOZ402-04		2 UG10CD		2 GPT10		1 CUG08		1 1123-32		1 1123-04		1 1123-04	
	2 AS0005-10	H2.5	1 CSTB3.5	T-15D	1 CSTB3.5	T-15D	2 CSTB4S	T-15D	2 CSTB4S	T-15D	1 CSTB3S	T-9D	1 CSTB3.5D	T-9D	1 CSTB2.5	T-8D	1 CSTB2.5	T-8D
	1 LS1805RH	H3					-											
							-											
55.00 - 57.99	1 OZ402-32		1 IOZ402-04		1 IOZ402-32		2 UG10CD		2 GPT10		1 CUG08		1 1123-32		1 1123-04		1 1123-32	
	2 AS0005-10	H2.5	1 CSTB3.5	T-15D	1 CSTA5	T-15D	2 CSTB4S	T-15D	2 CSTB4S	T-15D	1 CSTB3S	T-9D	1 CSTB3.5D	T-9D	1 CSTB2.5	T-8D	1 CSTB3.5D	T-9D
	1 LS1805RH	H3					-											
							-											
58.00 - 59.99	1 OZ402-32		1 IOZ402-32		1 IOZ402-32		2 UG10CD		2 GPT10		1 CUG08		1 1123-32		1 1123-32		1 1123-32	
	2 AS0005-10	H2.5	1 CSTA5	T-15D	1 CSTA5	T-15D	2 CSTB4S	T-15D	2 CSTB4S	T-15D	1 CSTB3S	T-9D	1 CSTB3.5D	T-9D	1 CSTB3.5D	T-9D	1 CSTB3.5D	T-9D
	1 LS1805RH	H3					-											
							-											
60.00 - 63.99	1 OZ402-32		1 IOZ402-32		1 IOZ402-32		2 UG14CD		2 GPT14		1 CUG08		1 1123-32		1 1123-32		1 1123-32	
	2 AS0005-10	H2.5	1 CSTA5	T-15D	1 CSTA5	T-15D	2 CSTA5S	T-15D	2 CSTA5S	T-15D	1 CSTB3S	T-9D	1 CSTB3.5D	T-9D	1 CSTB3.5D	T-9D	1 CSTB3.5D	T-9D
	1 LS1805RH	H3					-											
							-											
64.00 - 67.99	1 OZ402-43		1 IOZ402-32		1 IOZ402-32		2 UG14CD		2 GPT14		1 CUG10		1 1123-43		1 1123-32		1 1123-32	
	2 AS0005-15	H2.5	1 CSTA5	T-15D	1 CSTA5	T-15D	2 CSTA5S	T-15D	2 CSTA5S	T-15D	1 CSTB3S	T-9D	1 CSTB4M	T-15D	1 CSTB3.5D	T-9D	1 CSTB3.5D	T-9D
	1 LS1806RH	H4					-											
							-											
68.00 - 77.99	1 OZ402-32		1 IOZ402-43		1 IOZ402-43		2 UG14CD		2 GPT14		1 CUG10		1 1123-32		1 1123-43		1 1123-43	
	2 AS0005-10	H2.5	1 LS1206	H3	1 LS1206	H3	2 CSTA5S	T-15D	2 CSTA5S	T-15D	1 CSTB3S	T-9D	1 CSTB3.5D	T-9D	1 CSTB4M	T-15D	1 CSTB4M	T-15D
	1 LS1805RH	H3					-											
							-											
78.00 - 84.99	1 OZ402-43		1 IOZ402-43		1 IOZ402-43		2 UG14CD		2 GPT14		1 CUG10		1 1123-43		1 1123-43		1 1123-43	
	2 AS0005-15	H2.5	1 LS1206	H3	1 LS1206	H3	2 CSTA5S	T-15D	2 CSTA5S	T-15D	1 CSTB3S	T-9D	1 CSTB4M	T-15D	1 CSTB4M	T-15D	1 CSTB4M	T-15D
	1 LS1806RH	H4					-											
							-											
85.00 - 91.99	1 OZ402-63		1 IOZ402-43		1 IOZ402-43		2 UG14CD		2 GPT14		1 CUG10		1 1123-63		1 1123-43		1 1123-43	
	2 AS0006-15	H3	1 LS1206	H3	1 LS1206	H3	2 CSTA5S	T-15D	2 CSTA5S	T-15D	1 CSTB3S	T-9D	1 CSTB5	T-20D	1 CSTB4M	T-15D	1 CSTB4M	T-15D
	1 LS1806RH	H4					-											
							-											
92.00 - 98.99	1 OZ402-43		1 IOZ402-63		1 IOZ402-63		2 UG14CD		2 GPT14		1 CUG10		1 1123-43		1 1123-63		1 1123-63	
	2 AS0005-15	H2.5	1 LS1206	H3	1 LS1206S	H3	2 CSTA5S	T-15D	2 CSTA5S	T-15D	1 CSTB3S	T-9D	1 CSTB4M	T-15D	1 CSTB5	T-20D	1 CSTB5	T-20D
	1 LS1806RH	H4					1 FILLER14											
							2 CSTA5S	T-15D										
99.00 - 106.99	1 OZ402-63		1 IOZ402-63		1 IOZ402-63		2 UG18CD		2 GPT18-M		1 CUG14-M		1 1123-63		1 1123-63		1 1123-63	
	2 AS0006-15	H3	1 LS1206	H3	1 LS1206S	H3	2 LS1206S	H3	2 LS1206S	H3	1 CSTA5S	T-15D	1 CSTB5	T-20D	1 CSTB5	T-20D	1 CSTB5	T-20D
	1 LS1806RH	H4					1 FL18-M											
							2 LS1206S	H3										

UNIDEX Spare Parts Chart ø38.00 - 106.99 mm

UNIDEX Spare Parts Chart ø107.00 - 214.99 mm

DIA mm	Cartridge			Guide Pad			Insert		
	Qty Peripheral Cartridge Adjust Screw Wrench Lock Screw Wrench	Qty Inner Cartridge Lock Screw Wrench	Qty Center Cartridge Lock Screw Wrench	Qty Guide Pad Lock Screw Wrench Filler Lock Screw Wrench	Qty Protector Lock Screw Wrench	Qty Sub Guide Pad Lock Screw Wrench	Qty Peripheral Insert Insert Screw Wrench	Qty Inner Insert Insert Screw Wrench	Qty Center Insert Insert Screw Wrench
107.00 - 117.99	1 OZ402-43 2 AS0005-15 H2.5 1 LS1806RH H4	3 IOZ402-32 3 CSTA5 T-15D	1 IOZ402-43 1 LS1206 H3	2 UG18CD 2 LS1206S H3 1 FL18-M 2 LS1206S H3	2 GPT18-M 2 LS1206S H3	1 CUG14-M 1 CSTA5S T-15D	1 1123-43 1 CSTB4M T-15D	3 1123-32 3 CSTB3.5D T-9D	1 1123-43 1 CSTB4M T-15D
118.00 - 135.99	1 OZ402-43 2 AS0005-15 H2.5 1 LS1806RH H4	3 IOZ402-43 3 LS1206 H3	1 IOZ402-43 1 LS1206 H3	2 UG18CD 1 LS1206S H3 1 LS1206SSS* H3 1 FL18-M 2 LS1206S H3	2 GPT18-M 2 LS1206S H3	1 CUG14-M 1 CSTA5S T-15D	1 1123-43 1 CSTB4M T-15D	3 1123-43 3 CSTB4M T-15D	1 1123-43 1 CSTB4M T-15D
136.00 - 144.99	1 OZ402-43 2 AS0005-15 H2.5 1 LS1806RH H4	3 IOZ402-43 3 LS1206 H3	1 IOZ402-63 1 LS1206S H3	4 UG18CD 2 LS1206S H3 2 LS1206SSS* H3 1 FL18-M 2 LS1206S H3	4 GPT18-M 4 LS1206S H3	1 CUG14-M 1 CSTA5S T-15D	1 1123-43 1 CSTB4M T-15D	3 1123-43 3 CSTB4M T-15D	1 1123-63 1 CSTB5 T-20D
145.00 - 150.99	1 OZ402-43 2 AS0005-15 H2.5 1 LS1806RH H4	2 IOZ402-43 1 IOZ402-63 3 LS1206 H3	1 IOZ402-63 1 LS1206S H3	4 UG18CD 2 LS1206S H3 2 LS1206SSS* H3 1 FL18-M 2 LS1206S H3	4 GPT18-M 4 LS1206S H3	1 CUG14-M 1 CSTA5S T-15D	1 1123-43 1 CSTB4M T-15D	2 1123-43 1 1123-63 2 CSTB4M T-15D 1 CSTB5 T-20D	1 1123-63 1 CSTB5 T-20D
151.00 - 156.99	1 OZ402-63 2 AS0006-15 H3 1 LS1806RH H4	2 IOZ402-43 1 IOZ402-63 3 LS1206 H3L	1 IOZ402-63 1 LS1206S H3L	4 UG18CD 4 LS1206S H3 1 FL18-M 2 LS1206S H3	4 GPT18-M 4 LS1206S H3	1 CUG14-M 1 CSTA5S T-15D	1 1123-63 1 CSTB5 T-20D	2 1123-43 1 1123-63 2 CSTB4M T-15D 1 CSTB5 T-20D	1 1123-63 1 CSTB5 T-20D
157.00 - 162.99	1 OZ402-63 2 AS0006-15 H3 1 LS1806RH H4	1 IOZ402-43 2 IOZ402-63 3 LS1206 H3L	1 IOZ402-63 1 LS1206S H3L	4 UG18CD 4 LS1206S H3 1 FL18-M 2 LS1206S H3	4 GPT18-M 4 LS1206S H3	1 CUG14-M 1 CSTA5S T-15D	1 1123-63 1 CSTB5 T-20D	1 1123-43 2 1123-63 1 CSTB4M T-15D 2 CSTB5 T-20D	1 1123-63 1 CSTB5 T-20D
163.00 - 168.99	1 OZ402-63 2 AS0006-15 H3 1 LS1806RH H4	3 IOZ402-63 3 LS1206 H3L	1 IOZ402-63 1 LS1206S H3L	4 UG18CD 4 LS1206S H3 1 FL18-M 2 LS1206S H3	4 GPT18-M 4 LS1206S H3	1 CUG14-M 1 CSTA5S T-15D	1 1123-63 1 CSTB5 T-20D	3 1123-63 3 CSTB5 T-20D	1 1123-63 1 CSTB5 T-20D
169.00 - 188.99	1 OZ402-43 2 AS0005-15 H2.5 1 LS1806RH H4	5 IOZ402-43 5 LS1206 H3L	1 IOZ402-43 1 LS1206 H3L	4 UG18CD 2 LS1206S H3 2 LS1206SSS* H3 1 FL18-M 2 LS1206S H3	4 GPT18-M 4 LS1206S H3	1 CUG14-M 1 CSTA5S T-15D	1 1123-43 1 CSTB4M T-15D	5 1123-43 5 CSTB4M T-15D	1 1123-43 1 CSTB4M T-15D
189.00 - 196.99	1 OZ402-43 2 AS0005-15 H2.5 1 LS1806RH H4	5 IOZ402-43 5 LS1206 H3L	1 IOZ402-63 1 LS1206S H3L	4 UG18CD 2 LS1206S H3 2 LS1206SSS* H3 1 FL18-M 2 LS1206S H3	4 GPT18-M 4 LS1206S H3	1 CUG14-M 1 CSTA5S T-15D	1 1123-43 1 CSTB4M T-15D	5 1123-43 5 CSTB4M T-15D	1 1123-63 1 CSTB5 T-20D
197.00 - 202.99	1 OZ402-43 2 AS0005-15 H2.5 1 LS1806RH H4	4 IOZ402-43 1 IOZ402-63 5 LS1206 H3L	1 IOZ402-63 1 LS1206S H3L	4 UG18CD 2 LS1206S H3 2 LS1206SSS* H3 1 FL18-M 2 LS1206S H3	4 GPT18-M 4 LS1206S H3	1 CUG14-M 1 CSTA5S T-15D	1 1123-43 1 CSTB4M T-15D	4 1123-43 1 1123-63 4 CSTB4M T-15D 1 CSTB5 T-20D	1 1123-63 1 CSTB5 T-20D
203.00 - 208.99	1 OZ402-43 2 AS0005-15 H2.5 1 LS1806RH H4	3 IOZ402-43 2 IOZ402-63 5 LS1206 H3L	1 IOZ402-63 1 LS1206S H3L	4 UG18CD 2 LS1206S H3 2 LS1206SSS* H3 1 FL18-M 2 LS1206S H3	4 GPT18-M 4 LS1206S H3	1 CUG14-M 1 CSTA5S T-15D	1 1123-43 1 CSTB4M T-15D	3 1123-43 2 1123-63 3 CSTB4M T-15D 2 CSTB5 T-20D	1 1123-63 1 CSTB5 T-20D
209.00 - 214.99	1 OZ402-63 2 AS0006-15 H3 1 LS1806RH H4	3 IOZ402-43 2 IOZ402-63 5 LS1206 H3L	1 IOZ402-63 1 LS1206S H3L	4 UG18CD 4 LS1206S H3 1 FL18-M 2 LS1206S H3	4 GPT18-M 4 LS1206S H3	1 CUG14-M 1 CSTA5S T-15D	1 1123-63 1 CSTB5 T-20D	3 1123-43 2 1123-63 3 CSTB4M T-15D 2 CSTB5 T-20D	1 1123-63 1 CSTB5 T-20D

* Lock screw LS1206SSS is used with Dimensional Guide Pad UG18CD

UNIDEX Spare Parts Chart

ø215.00 - 293.99 mm

DIA mm	Cartridge						Guide Pad						Insert					
	Qty	Peripheral Cartridge Adjust Screw Lock Screw	Wrench Wrench	Qty	Inner Cartridge Lock Screw	Wrench	Qty	Center Cartridge Lock Screw	Wrench	Qty	Guide Pad Lock Screw Filler Lock Screw	Wrench Wrench	Qty	Protector Lock Screw	Wrench	Qty	Sub Guide Pad Lock Screw	Wrench
215.00 - 220.99	1 2 1	OZ402-63 AS0006-15 LS1806RH	 H3 H4	2 3 5	IOZ402-43 IOZ402-63 LS1206	 H3L	1 1	IOZ402-63 LS1206S	 H3L	4 4 1 2	UG18CD LS1206S FL18-M LS1206S	 H3 H3	4 4	GPT18-M LS1206S	 H3	1 1	CUG14-M CSTA5S	 T-15D
221.00 - 226.99	1 2 1	OZ402-63 AS0006-15 LS1806RH	 H3 H4	1 4 5	IOZ402-43 IOZ402-63 LS1206	 H3L	1 1	IOZ402-63 LS1206S	 H3L	4 4 1 2	UG18CD LS1206S FL18-M LS1206S	 H3 H3	4 4	GPT18-M LS1206S	 H3	1 1	CUG14-M CSTA5S	 T-15D
227.00 - 232.99	1 2 1	OZ402-63 AS0006-15 LS1806RH	 H3 H4	5 5	IOZ402-63 LS1206	 H3L	1 1	IOZ402-63 LS1206S	 H3L	4 4 1 2	UG18CD LS1206S FL18-M LS1206S	 H3 H3	4 4	GPT18-M LS1206S	 H3	1 1	CUG14-M CSTA5S	 T-15D
233.00 - 247.99	1 2 1	OZ402-43 AS0005-15 LS1806RH	 H2.5 H4	7 7	IOZ402-43 LS1206	 H3L	1 1	IOZ402-63 LS1206S	 H3L	4 2 2 1 2	UG18CD LS1206S LS1206SSS* FL18-M LS1206S	 H3 H3 H3	4 4	GPT18-M LS1206S	 H3	1 1	CUG14-M CSTA5S	 T-15D
248.00 - 253.99	1 2 1	OZ402-63 AS0006-15 LS1806RH	 H3 H4	7 7	IOZ402-43 LS1206	 H3L	1 1	IOZ402-63 LS1206S	 H3L	4 4 1 2	UG18CD LS1206S FL18-M LS1206S	 H3 H3	4 4	GPT18-M LS1206S	 H3	1 1	CUG14-M CSTA5S	 T-15D
254.00 - 258.99	1 2 1	OZ402-63 AS0006-15 LS1806RH	 H3 H4	6 1 7	IOZ402-43 IOZ402-63 LS1206	 H3L	1 1	IOZ402-63 LS1206S	 H3L	4 4 1 2	UG18CD LS1206S FL18-M LS1206S	 H3 H3	4 4	GPT18-M LS1206S	 H3	1 1	CUG14-M CSTA5S	 T-15D
259.00 - 264.99	1 2 1	OZ402-63 AS0006-15 LS1806RH	 H3 H4	5 2 7	IOZ402-43 IOZ402-63 LS1206	 H3L	1 1	IOZ402-63 LS1206S	 H3L	4 4 1 2	UG18CD LS1206S FL18-M LS1206S	 H3 H3	4 4	GPT18-M LS1206S	 H3	1 1	CUG14-M CSTA5S	 T-15D
265.00 - 271.99	1 2 1	OZ402-63 AS0006-15 LS1806RH	 H3 H4	4 3 7	IOZ402-43 IOZ402-63 LS1206	 H3L	1 1	IOZ402-63 LS1206S	 H3L	4 4 1 2	UG18CD LS1206S FL18-M LS1206S	 H3 H3	4 4	GPT18-M LS1206S	 H3	1 1	CUG14-M CSTA5S	 T-15D
272.00 - 275.99	1 2 1	OZ402-63 AS0006-15 LS1806RH	 H3 H4	3 4 7	IOZ402-43 IOZ402-63 LS1206	 H3L	1 1	IOZ402-63 LS1206S	 H3L	4 4 1 2	UG18CD LS1206S FL18-M LS1206S	 H3 H3	4 4	GPT18-M LS1206S	 H3	1 1	CUG14-M CSTA5S	 T-15D
276.00 - 284.99	1 2 1	OZ402-63 AS0006-15 LS1806RH	 H3 H4	2 5 7	IOZ402-43 IOZ402-63 LS1206	 H3L	1 1	IOZ402-63 LS1206S	 H3L	4 4 1 2	UG18CD LS1206S FL18-M LS1206S	 H3 H3	4 4	GPT18-M LS1206S	 H3	1 1	CUG14-M CSTA5S	 T-15D
285.00 - 289.99	1 2 1	OZ402-63 AS0006-15 LS1806RH	 H3 H4	1 6 7	IOZ402-43 IOZ402-63 LS1206	 H3L	1 1	IOZ402-63 LS1206S	 H3L	4 4 1 2	UG18CD LS1206S FL18-M LS1206S	 H3 H3	4 4	GPT18-M LS1206S	 H3	1 1	CUG14-M CSTA5S	 T-15D
290.00 - 293.99	1 2 1	OZ402-63 AS0006-15 LS1806RH	 H3 H4	7 7	IOZ402-63 LS1206	 H3L	1 1	IOZ402-63 LS1206S	 H3L	4 4 1 2	UG18CD LS1206S FL18-M LS1206S	 H3 H3	4 4	GPT18-M LS1206S	 H3	1 1	CUG14-M CSTA5S	 T-15D

DIA mm	Insert																	
	Qty	Peripheral Insert Insert Screw	Wrench	Qty	Inner Insert Insert Screw	Wrench	Qty	Center Insert Insert Screw	Wrench									
215.00 - 220.99	1 1	1123-63 CSTB5	 T-20D	2 3 2 3	1123-43 1123-63 CSTB4M CSTB5	 T-15D T-20D	1 1	1123-63 CSTB5	 T-20D									
221.00 - 226.99	1 1	1123-63 CSTB5	 T-20D	1 4 1 4	1123-43 1123-63 CSTB4M CSTB5	 T-15D T-20D	1 1	1123-63 CSTB5	 T-20D									
227.00 - 232.99	1 1	1123-63 CSTB5	 T-20D	5 5	1123-63 CSTB5	 T-20D	1 1	1123-63 CSTB5	 T-20D									
233.00 - 247.99	1 1	1123-43 CSTB4M	 T-15D	7 7	1123-43 CSTB4M	 T-15D	1 1	1123-63 CSTB5	 T-20D									
248.00 - 253.99	1 1	1123-63 CSTB5	 T-20D	7 7	1123-43 CSTB4M	 T-15D	1 1	1123-63 CSTB5	 T-20D									
254.00 - 258.99	1 1	1123-63 CSTB5	 T-20D	6 1 6 1	1123-43 1123-63 CSTB4M CSTB5	 T-15D T-20D	1 1	1123-63 CSTB5	 T-20D									
259.00 - 264.99	1 1	1123-63 CSTB5	 T-20D	5 2 5 2	1123-43 1123-63 CSTB4M CSTB5	 T-15D T-20D	1 1	1123-63 CSTB5	 T-20D									
265.00 - 271.99	1 1	1123-63 CSTB5	 T-20D	4 3 4 3	1123-43 1123-63 CSTB4M CSTB5	 T-15D T-20D	1 1	1123-63 CSTB5	 T-20D									
272.00 - 275.99	1 1	1123-63 CSTB5	 T-20D	3 4 3 4	1123-43 1123-63 CSTB4M CSTB5	 T-15D T-20D	1 1	1123-63 CSTB5	 T-20D									
276.00 - 284.99	1 1	1123-63 CSTB5	 T-20D	2 5 2 5	1123-43 1123-63 CSTB4M CSTB5	 T-15D T-20D	1 1	1123-63 CSTB5	 T-20D									
285.00 - 289.99	1 1	1123-63 CSTB5	 T-20D	1 6 1 6	1123-43 1123-63 CSTB4M CSTB5	 T-15D T-20D	1 1	1123-63 CSTB5	 T-20D									
290.00 - 293.99	1 1	1123-63 CSTB5	 T-20D	7 7	1123-63 CSTB5	 T-20D	1 1	1123-63 CSTB5	 T-20D									

* Lock screw LS1206SSS is used with Dimensional Guide Pad UG18CD

UNIDEX Spare Parts Chart ø215.00 - 293.99 mm

Drill Tube

ST Inner thread connection

Four start thread (for dia. 15.60 and above) / Two start thread (for dia. 15.59 and less)

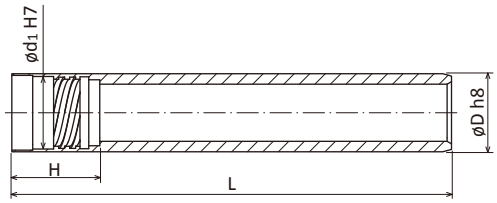

Drill Range (mm)	Code	L (mm) 1600	L (mm) 2600	L (mm) Special Length	Dimensions (mm) D	Dimensions (mm) d1	Dimensions (mm) H
12.60 - 13.60	ST0094	●		○	11	9.6	22
13.61 - 14.60	ST0095	●		○	12	10.6	22
14.61 - 15.59	ST0096	●		○	13	11.6	22
15.60 - 16.70	ST0097	●		○	14	12.6	21
16.71 - 17.70	ST0098	●	●	○	15	13.6	21
17.71 - 18.90	ST0099	●	●	○	16	14.5	22
18.91 - 20.00	ST0000	●	●	○	17	15.5	22
20.01 - 21.80	ST00	●	●	○	18	16	27.5
21.81 - 24.10	ST01		●	○	20	18	30
24.11 - 26.40	ST02		●	○	22	19.5	30
26.41 - 28.70	ST03		●	○	24	21	30
28.71 - 31.00	ST04		●	○	26	23.5	33
31.01 - 33.30	ST05		●	○	28	25.5	33
33.31 - 36.20	ST06		●	○	30	28	33
36.21 - 39.60	ST07		●	○	33	30	40
39.61 - 43.00	ST08		●	○	36	33	40
43.01 - 47.00	ST09		●	○	39	36	40
47.01 - 51.70	ST10		●	○	43	39	40
51.71 - 56.20	ST11		●	○	47	43	44
56.21 - 60.60	ST12		●	○	51	47	44
60.61 - 65.00	ST13			○	56	51	44

Drill Range (mm)	Code	L (mm) Special Length	Dimensions (mm) D	Dimensions (mm) d1	Dimensions (mm) H
65.00 - 66.99	ST14	○	56	52	75
67.00 - 72.99	ST15	○	62	58	75
73.00 - 79.99	ST16	○	68	63	75
80.00 - 86.99	ST17	○	75	70	97
87.00 - 99.99	ST18	○	82	77	97
100.00 - 111.99	ST19	○	94	89	97
112.00 - 123.99	ST20	○	106	101	118
124.00 - 135.99	ST21	○	118	113	118
136.00 - 147.99	ST22	○	130	125	118
148.00 - 159.99	ST23	○	142	137	139
160.00 - 171.99	ST24	○	154	149	139
172.00 - 183.99	ST25	○	166	161	139
184.00 - 195.99	ST26	○	178	173	144
196.00 - 207.99	ST27	○	190	185	144
208.00 - 219.99	ST28	○	202	197	144
220.00 - 231.99	ST29	○	214	208	164
232.00 - 243.99	ST30	○	226	220	164
244.00 - 255.99	ST31	○	238	232	164
256.00 - 267.99	ST32	○	250	244	184
268.00 - 279.99	ST33	○	262	256	184
280.00 - 291.99	ST34	○	274	268	184

- Please indicate the length (L) when ordering. Ordering example for drill dia. ø60.00 mm and drill tube length 2600 mm: ST12X2600
- Other lengths are available upon request. Please contact Unitac sales department for further information.

● : Standard Stock item
○ : Special length

UB Outer thread connection Single start thread

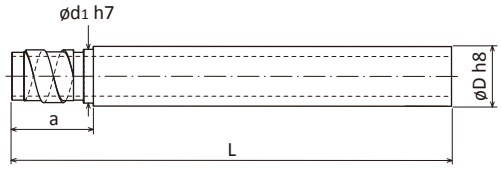

Drill Range (mm)	Code	L (mm) Special Length	Dimensions (mm) D	Dimensions (mm) d1	Dimensions (mm) a
14.50 - 15.00	UB12-1	○	12	11.5	23
15.01 - 15.50	UB12-2	○	12	11.8	23
15.51 - 16.00	UB13-1	○	13	12.4	23
16.01 - 16.50	UB13-2	○	13	12.7	23
16.51 - 17.25	UB14-1	○	14	13.4	23
17.26 - 18.00	UB14-2	○	14	13.7	23
18.01 - 19.00	UB15	○	15	14.4	23
19.01 - 19.99	UB16.5	○	16.5	15.4	23
20.00 - 21.99	UB18	○	18	16.5	26
22.00 - 24.99	UB20	○	20	19	26
25.00 - 26.99	UB22	○	22	20	26
27.00 - 29.99	UB24	○	24	22	26
30.00 - 31.99	UB26	○	26	24	26
32.00 - 33.99	UB28	○	28	26	26
34.00 - 36.99	UB30	○	30	27	41
37.00 - 39.99	UB33	○	33	30	41
40.00 - 43.99	UB36	○	36	33	41
44.00 - 46.99	UB39	○	39	37	41
47.00 - 51.99	UB43	○	43	41	41
52.00 - 56.99	UB47	○	47	44	41
57.00 - 60.99	UB51	○	51	49	41

Drill Range (mm)	Code	L (mm) Special Length	Dimensions (mm) D	Dimensions (mm) d1	Dimensions (mm) a
61.00 - 67.99	UB56	○	56	53	41
68.00 - 74.99	UB62	○	62	59	41
75.00 - 80.99	UB68	○	68	65	71
81.00 - 90.99	UB75	○	75	71	71
91.00 - 98.99	UB82	○	82	79	71
99.00 - 110.99	UB94	○	94	90	71
111.00 - 122.99	UB106	○	106	102	71
123.00 - 134.99	UB118	○	118	114	71
135.00 - 148.99	UB130	○	130	126	71
149.00 - 161.99	UB142	○	142	139	71
162.00 - 173.99	UB154	○	154	151	86
174.00 - 185.99	UB166	○	166	163	86
186.00 - 197.99	UB178	○	178	175	86
198.00 - 209.99	UB190	○	190	187	86
210.00 - 221.99	UB202	○	202	199	86
222.00 - 233.99	UB214	○	214	211	86
234.00 - 245.99	UB226	○	226	223	86
246.00 - 257.99	UB238	○	238	235	86
258.00 - 269.99	UB250	○	250	247	121
270.00 - 281.99	UB262	○	262	259	121
282.00 - 293.99	UB274	○	274	271	121

- Please indicate the length (L) when ordering. Ordering example for drill dia. ø60.00 mm and drill tube length 2600 mm: UB51X2600

○ : Special length

OT & IT Outer Tube & Inner Tube

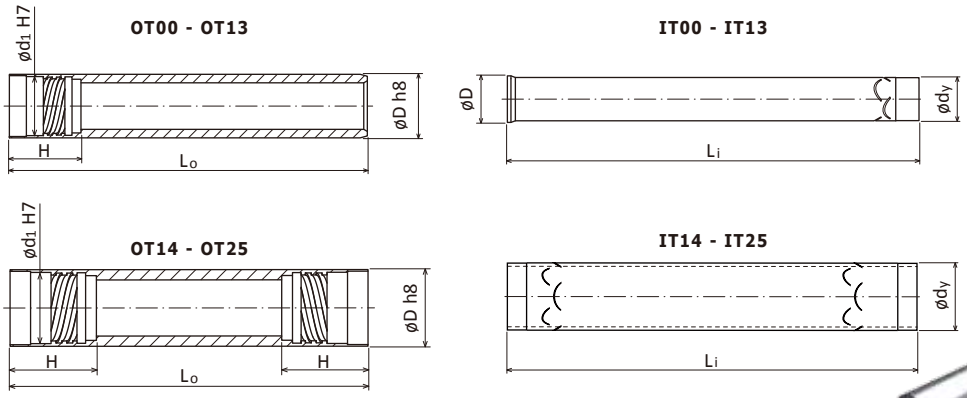

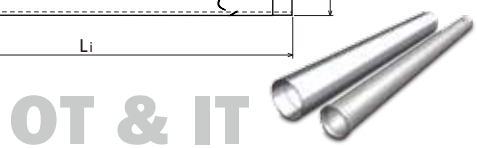

Drill Range (mm)	Outer Tube (OT)					Inner Tube (IT)			
	Code	Lo (mm) Special Length	Dimensions (mm) D	d1	H	Code	Li (mm) Special Length	Dimensions (mm) D	dy
18.40 - 20.00	OT00	○	18	16	27.5	IT00	○	12	10
20.01 - 21.80	OT01	○	19.5	18	30	IT01	○	14	12
21.81 - 24.10	OT02	○	21.5	19.5	30	IT02	○	15	13
24.11 - 26.40	OT03	○	23.5	21	30	IT03	○	16	14
26.41 - 28.70	OT04	○	26	23.5	33	IT04	○	18	16
28.71 - 31.00	OT05	○	28	25.5	33	IT05	○	20	18
31.01 - 33.30	OT06	○	30.5	28	33	IT06	○	22	20
33.31 - 36.20	OT07	○	33	30	40	IT07	○	24	22
36.21 - 39.60	OT08	○	35.5	33	40	IT08	○	26	24
39.61 - 43.00	OT09	○	39	36	40	IT09	○	29	27
43.01 - 47.00	OT10	○	42.5	39	40	IT10	○	32	30
47.01 - 51.70	OT11	○	46.5	43	44	IT11	○	35	32
51.71 - 56.20	OT12	○	51	47	44	IT12	○	39	36
56.21 - 65.00	OT13	○	55.5	51	44	IT13	○	43	40
65.00 - 69.99	OT14	○	56	52	75	IT14	○	-	40
70.00 - 72.99	OT15	○	62	58	75	IT15	○	-	44
73.00 - 79.99	OT16	○	68	63	75	IT16	○	-	48
80.00 - 86.99	OT17	○	75	70	97	IT17	○	-	54
87.00 - 99.99	OT18	○	82	77	97	IT18	○	-	60
100.00 - 111.99	OT19	○	94	89	97	IT19	○	-	70
112.00 - 123.99	OT20	○	106	101	118	IT20	○	-	80
124.00 - 135.99	OT21	○	118	113	118	IT21	○	-	80
136.00 - 147.99	OT22	○	130	125	118	IT22	○	-	95
148.00 - 159.99	OT23	○	142	137	139	IT23	○	-	100
160.00 - 171.99	OT24	○	154	149	139	IT24	○	-	120
172.00 - 183.99	OT25	○	166	161	139	IT25	○	-	130

○ : Special length

- Please indicate the length (L) when ordering. Ordering example for drill dia. ø60.00 mm and tube length 1070 mm: OT13X1070
- Inner Tube length (Li) should be ordered as follows.
  - ▸For ranges 18.40 - 65.00 (OT00 - OT13)..... Inner Tube length (Li) = Outer Tube length (Lo) + 30 mm
  - ▸For ranges 65.00 - 123.99 (OT14 - OT20)..... Inner Tube length (Li) = Outer Tube length (Lo) + 190 mm
  - ▸For ranges 124.00 - 183.99 (OT21 - OT25).... Inner Tube length (Li) = Outer Tube length (Lo) + 220 mm

Special Tooling

Various types of special tooling are available upon request. Some of the examples are shown below.
Please contact Unitac sales department for further information.

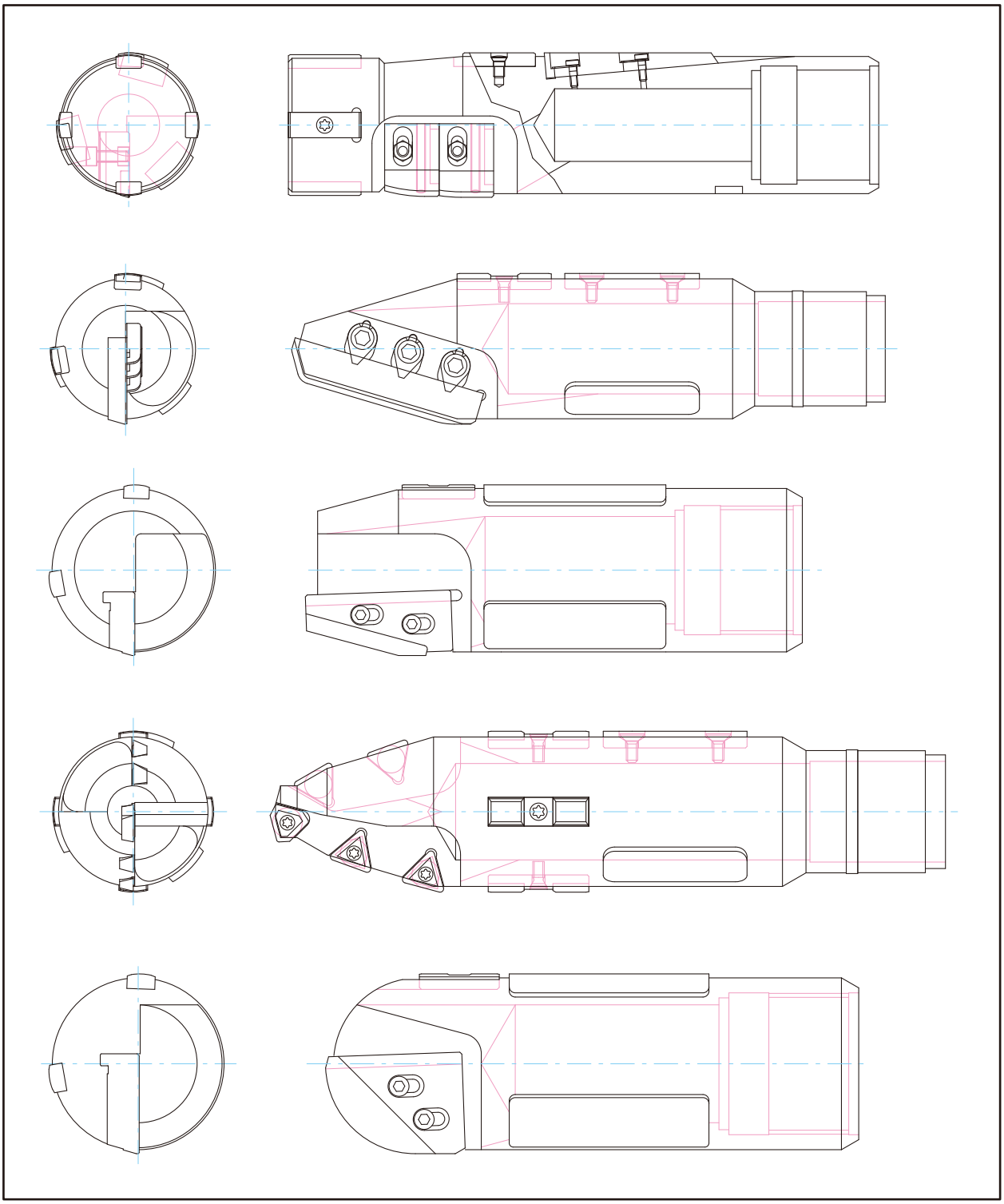

Requested Information Form for Special Tooling

Company Name		Contact Person	
Telephone No.		FAX No.	
Email Address			

Drill Dia.(ø)	
Drill Tube Dia.(ø)	
Quantity	
Request Delivery date	

Description of your sytem in use:

Please sketch your drilling application

UNIDEX Order Sheet (Standard Drill Head)

Company Name		Contact Person	
Telephone No.		FAX No.	
Email Address			

Drill Head Dia.(ø)	
Drill Tube Dia.(ø)	
Drill Head code	
Quantity	
Request Delivery Date	

Ordering example:
for drill head dia.ø125.00 ／ STS outer thread KUSTS21E-125.00

CHECK!
☐ STS / DTS
☐ Thread size

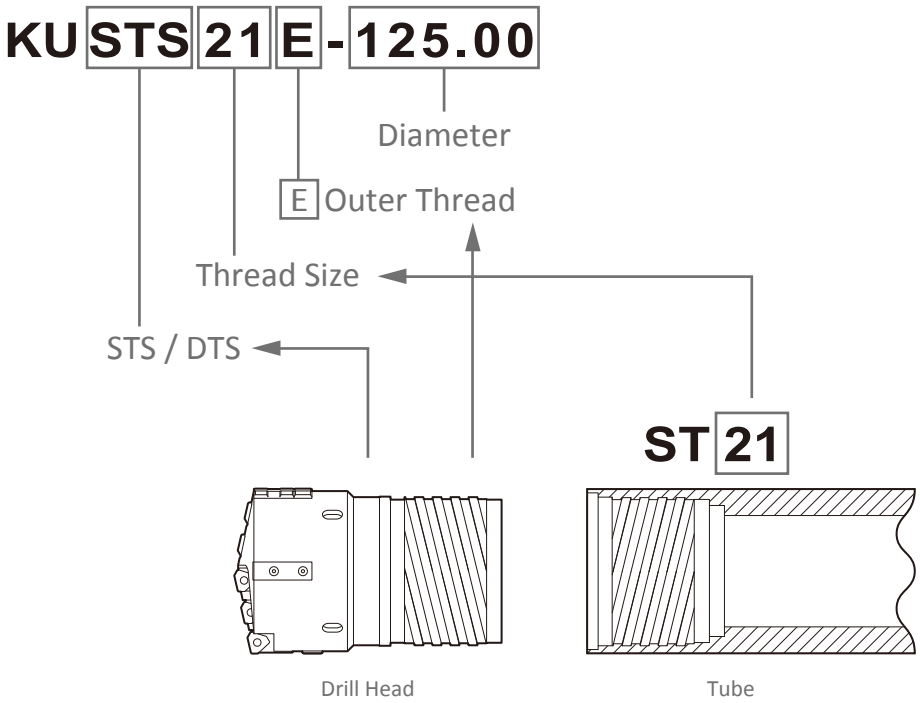

UNIDEX Order Sheet for Semi Standard

Company Name		Contact Person	
Telephone No.		FAX No.	
Email Address			

Drill Head Dia.(ø)	
Drill Tube Dia.(ø)	
Drill Head code	
Quantity	
Request Delivery Date	

☐ Top Guide Pad

Please add "-T" to ordering code for using top guide pad as below

Ordering example:
for drill head dia.ø125.00 / STS outer thread

KUSTS21E-T-125.00

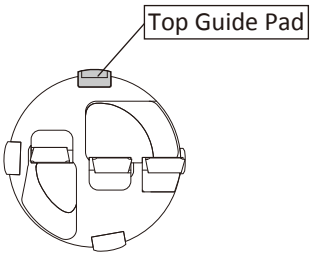

☐ Outsize Thread

For smaller thread with more than 2 range difference, please use information form for special tooling on page 41.

Please add "X" to ordering code for outsize thread as below

Ordering example:
for drill head dia.ø125.00 / STS outer thread with one range smaller thread KUSTS20EX-125.00

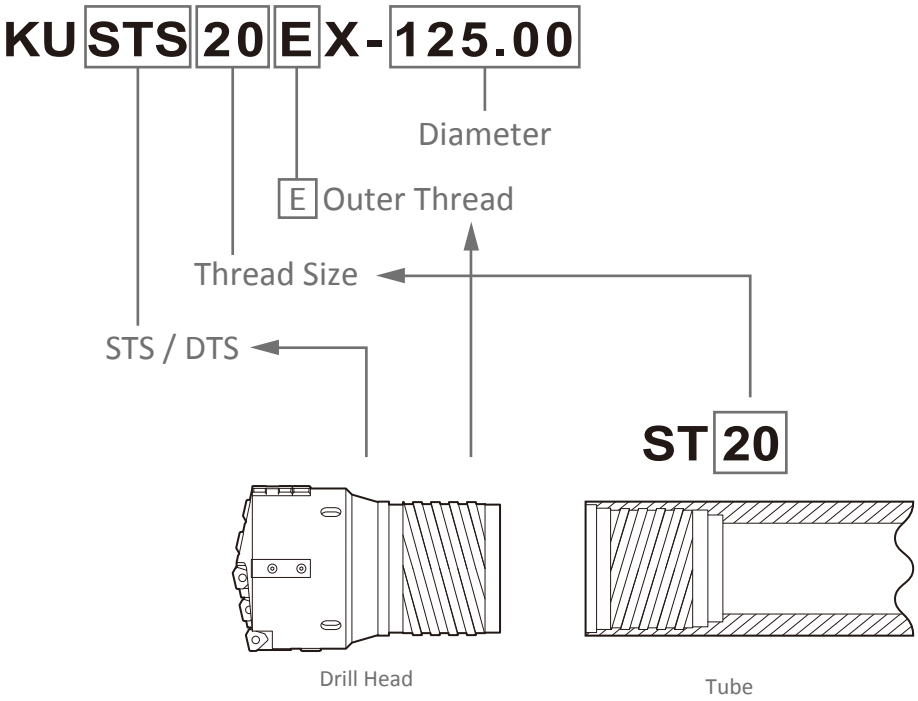

UNIDEX Order Sheet (Spare Parts)

Company Name		Contact Person	
Telephone No.		FAX No.	
Email Address			

			Ordering Code	Qty
Cartridge	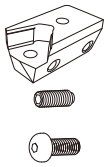	Peripheral Cartridge		pc
		Adjust Screw		pc
		Lock Screw		pc
		Center / Inner Cartridge		pc
				pc
		Lock Screw		pc
				pc
Guide Pad & Protector	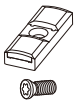	Guide Pad		pc
		Lock Screw		pc
	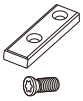	Filler		pc
		Lock Screw		pc
	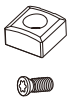	Guide Pad Protector		pc
		Lock Screw		pc
Sub Guide	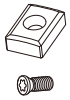	Sub Guide Pad		pc
		Lock Screw		pc
Insert		Peripheral Insert		pc
		Insert Screw		pc
		Center / Inner Insert		pc
				pc
		Insert Screw		pc
				pc
Wrench	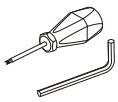	Wrench		pc
				pc

UNITAC Drill Head Series for Deep Hole Drilling

STS Single Tube System

Solid Drilling

Thread Type	Code	Appearance	Diameter Range (mm)	Hole Tolerance	Surface Finish(Ra)	Fixture	Feature
Outer Thread	**MBU**		8.00 - 14.79	IT9	2μm	Brazed Tips	• Higher productivity and better surface finish than gundrill • Good chip breaking with 3 step cutting edge design
	UTE		12.60 - 20.00	IT9	2μm		• Higher productivity and better surface finish than gundrill • Good chip breaking with 3 step cutting edge design • First recommendation for dia ø12.60 - 15.59mm
	BTU		12.60 - 65.00	IT9	2μm		• First recommendation for dia ø15.60 or more • Good chip breaking with 3 cutting edges (ø12.60 - 15.59mm has 2 cutting edges) • Covers all materials with various carbide grade combinations
	KUSTS		38.00 - 247.99	IT10	3μm	Indexable Inserts	• Cartridge type - Diameter finely adjustable • Covers wide application area with various options
	0124		30.00 - 65.00	IT11	3μm		• Direct mount type - No diameter setting necessary • Improved productivity and safety in deep hole drilling
Inner Thread	**KUSTS**		38.00 - 245.99	IT10	3μm	Indexable Inserts	• Cartridge type - Diameter finely adjustable • Covers wide application area with various options
	0124		30.00 - 65.00	IT11	3μm		• Direct mount type - No diameter setting necessary • Improved productivity and safety in deep hole drilling

Counterboring

Thread Type	Code	Appearance	Diameter Range (mm)	Hole Tolerance	Surface Finish(Ra)	Fixture	Feature
Outer Thread	**KUSTR**		25.00 - 291.99	IT10	1-2μm	Indexable Inserts	• Cartridge type - Diameter finely adjustable • Covers wide application area with various options
Inner Thread	**KUSTR**		25.00 - 293.99	IT10	1-2μm	Indexable Inserts	• Cartridge type - Diameter finely adjustable • Covers wide application area with various options

Trepanning

Thread Type	Code	Appearance	Diameter Range (mm)	Hole Tolerance	Surface Finish(Ra)	Fixture	Feature
Outer Thread	**UTT**		100.00 - 328.00	IT10	1-2μm	Indexable Inserts	• Cartridge type - Diameter finely adjustable • Covers wide application area with various options
Inner Thread	**UTT**		100.00 - 305.99	IT10	1-2μm	Indexable Inserts	• Cartridge type - Diameter finely adjustable • Covers wide application area with various options

DTS Double Tube System

Solid Drilling

Thread Type	Code	Appearance	Diameter Range (mm)	Hole Tolerance	Surface Finish(Ra)	Fixture	Feature
Outer Thread	**ETU**		18.40 - 65.00	IT9	2μm	Brazed Tips	• Good chip breaking with 3 cutting edges • Covers all materials with various carbide grade combinations
	KUDTS		38.00 - 183.99	IT10	3μm	Indexable Inserts	• Cartridge type - Diameter finely adjustable • Covers wide application area with various options
	0124		30.00 - 65.00	IT11	3μm		• Direct mount type - No diameter setting necessary • Improved productivity and safety in deep hole drilling

Counterboring

Thread Type	Code	Appearance	Diameter Range (mm)	Hole Tolerance	Surface Finish(Ra)	Fixture	Feature
Outer Thread	**KUDTR**		25.00 - 183.99	IT10	1-2μm	Indexable Inserts	• Cartridge type - Diameter finely adjustable • Covers wide application area with various options

The above values may change depending on the machining conditions, materials, etc.

⚠ Safety Notes

1. Introduction

The following information is provided to be read before using the tool so that the tool is handled properly and safely.

2. Basic Information of Cutting Tool Materials

2-1. Technical Terms

Cutting Tool Material :	General term of tool material, such as Cemented Carbide, Coated Carbide, Cermet, Coated Cermet, Ceramics, CBN and PCD
Carbide Material :	Cemented Carbide with WC (Tungsten Carbide) as the main ingredient

2-2. Physical Property

Appearance :	Depends on materials. (e.g. Gray, Black, Gold, etc.)
Smell :	None
Hardness :	Carbide and Cermet: 5 - 30GPaHV, Ceramic: 10 - 40GPaHV, CBN: 20 - 50GPaHV, PCD: 80 - 120GPaHV
Specific Gravity :	Carbide: 9 - 16, Cermet: 5 - 9, Ceramic: 2 - 7, CBN / PCD: 3 - 5, HSS: 7 - 9, Alloy steel: 7 - 9

2-3. Composition

Carbide, Nitride, Carbon-nitride and Oxide with W, Ti, Al, Si, Ta, B, etc. and metals of Co, Ni, Cr, Mo, etc.

3. Notes for Handling Cutting Tool Materials

- These cutting tool materials are very hard but brittle. They may be broken by shock or excessive clamp force.
- Since cutting tool materials have high specific gravities, they can be heavy. Handle with care when transferring and storing.
- The thermal expansion of cutting tool material is different from that of metal materials. Because of this, for shrink-fit or cooling-fit products, if the usage temperate is slightly higher (lower) than the specified temperature, cracking may occur.
- If cutting tool materials become corroded due to cutting fluid, lubricating agents, or other moisture, their strength will be reduced. Care should be taken regarding storage conditions.

4. Notes for Machining Cutting Tool Materials

- For carbide tool materials, the strength may be slightly reduced due to the surface conditions. For finishing, always use a diamond grinder.
- When cutting tool materials are ground or heated, dust or mist (smoke) occurs. If a lot of it is inhaled, swallowed, or comes in contact with the eyes or skin, it could result in injury to the body. When machining, be careful to avoid exposing your body to the dust or mist; it is recommended that localized ventilation equipment be used and that a protective mask, protective goggles, and protective gloves be worn. In addition, if the dust, etc. comes in contact with your hands, wash them thoroughly with soap and water. Do not drink or eat in the work area, and wash your hands before drinking or eating. Dust on clothes should not be shaken out; use a vacuum, etc. to remove the dust or wash the clothes in a washing machine. If the cobalt contained in the cutting tool material is touched repeatedly or over a long period of time, it has been reported that it may affect the skin, respiratory organs, or heart, etc.
- When performing wet machining of carbide tool materials or brazed tool, the cutting fluid may contain heavy metals and must be disposed of properly.
- When a cutting tool product has been reground, check that there are no cracks after regrinding.
- If a laser or electric pen, etc. is used to mark carbide tool material or products, cracks may form. Do not mark sections which may be subject to stress.
- When electric discharge machining is used on carbide tool materials or products, cracks may form on the surface which cause strength reduction. If this process is necessary, make sure to remove the cracks completely by additional operation such as griding.
- When brazing the carbide tool materials, use the proper temperature to prevent falling off or breaking of the tip.

Precaution for using cutting tools

Items	Issue	Counter measures
General Cutting Tools	◎ Direct touch to a sharp cutting edge may cause injury.	∗ When setting up tools to the machine or taking them out of the case, please wear protective gloves.
	◎ Misuse or inappropriate working conditions may cause tool breakage or dispersion of broken pieces.	∗ Please use safety items, such as safety glasses and protective gloves. ∗ Please use safety goods in the area of our recommended cutting condition. See our catalog or instruction manuals.
	◎ Excessive impact or heavy wear will increase cutting resistance and may cause tool breakage and dispersion of broken pieces.	∗ Please use safety items, such as safety glasses and protective gloves. ∗ Early exchanging tools is preferable.
	◎ Dispersion of hot or long chips may cause injury or burn.	∗ Please use safety items, such as safety glasses and protective gloves. ∗ When getting rid of chips, please stop operation first and wear safety items and use tools such as nipper and clipper.
	◎ During cutting operation, cutting tools generate high heat. Touching tools immediately after operation may cause burn.	∗ Please use safety items, such as safety glasses and protective gloves.
	◎ Sparks, generation of heat or chips in high temperature during operation may cause fire.	∗ Please do not operate around Hazardous zone, in which area there is some possibility of fire or explosion. ∗ In case of using oil-coolant, please be sure there is enough system for fire-prevention.
	◎ Lack of dynamic balance in high-speed revolution cause tool to break due to vibration.	∗ Please use safety items, such as safety glasses and protective gloves. ∗ Please conduct test-operation before cutting, and confirm that there is no vibration or unusual sound.
	◎ Direct touch to burrs which were generated on the rough surface of the workpiece may cause injury.	∗ Please do not touch workpiece with bare hand.
Indexable Cutting Tools	◎ If inserts or parts are not clamped well, falling off or dispersion may occur and cause injury.	∗ Please clean up insert pockets or clamping parts before setting insert. ∗ Please set up inserts with supplied wrench only, and confirm that the inserts or parts are clamped completely.
	◎ If inserts are clamped too tightly by supplementary tools like pipe etc, inserts or body may be broken.	∗ Please set up with supplied wrench only.
	◎ When inserts are used in high-speed revolution or parts may burst out of the body due to centrifugal force.	∗ Please use within recommended usage range. See our catalog or instruction.
Milling Cutters and other Milling Tools	◎ Since milling cutters have sharp edges, direct contact with bare hands may cause injury.	∗ Please use safety items, such as safety glasses and protective gloves.
	◎ If a cutter lacks balance, tools would cause vibration and it may cause injury by dispersion of broken pieces.	∗ Please use them in the range of our recommended machining condition. ∗ Rotating portion and balancing should be checked regularly to prevent from eccentric rotation or run out due to wear of bearing portion.
Drills	◎ When drilling through hole with rotating workpiece, a disc sometimes flies out from the end of workpiece with high speed. This is very dangerous since the disc has sharp edge.	∗ Please use safety items, such as safety glasses and protective gloves. Also attach covers on chuck part.
	◎ Some micro drills have sharp edge with the top. Direct touch to tools may cause injury.	∗ Please use safety items, such as safety glasses and protective gloves.
Brazed Tools	◎ Dispersion or falling off of broken tips may cause injury.	∗ Please check tips are brazed firmly. ∗ Please do not use brazed tools in the condition that requires high cutting temperature.
Others	◎ If brazing is carried out many times, the strength of carbide tip is deteriorated and becomes easy to be broken during cutting.	∗ Please do not use carbide tools which are brazed several times since tool strength have been deteriorated.
	◎ It is dangerous to use tools except for the fixed application. It may damage tools and machines.	∗ Please keep recommended usage of tools.

Reference: JAPAN CEMENTED CARBIDE TOOL MANUFACTURERS' ASSOCIATION

UNITAC Head Office / Plant

Located in Kurume Business Park which has a combination of manufacturing and business enterprises near the center of Kurume City, UNITAC manufactures its high quality deep hole drilling tools. This convenient location allows easy access to highways, airports, rail service and Fukuoka Port.
UNITAC has an extensive quarter-century history in this field and as a member of IMC Group we produce and market our products to customers worldwide.

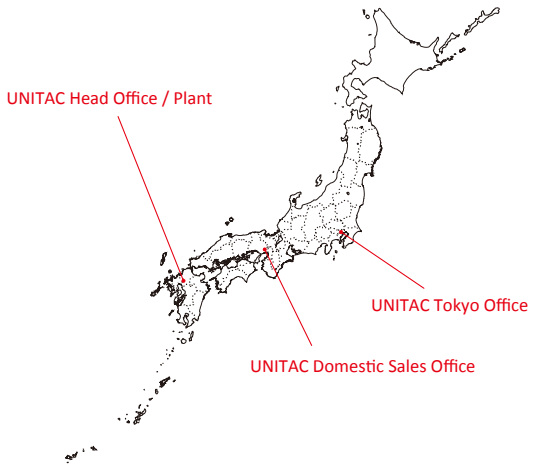

Deep hole tooling Manufacturer
UNITAC INCORPORATED

Head Office / Kurume Plant 7-57 MIYANOJIN-3 KURUME FUKUOKA 839-0801
TEL +81-942-33-4159 FAX +81-942-27-9940

Domestic Sales 23-21 MINAMIMUKONOSO-3 AMAGASAKI 661-0033
TEL +81-6-6432-8403 FAX +81-6-6432-4091

Web site (English) http://www.unitacinc.com
(Japanese) http://www.unitac.co.jp
E-mail : j-sales@unitac.co.jp

Tool specifications are subject to change without notice for the purpose of improvement of the products.

JQA-QM6991
KYUSHU PLANT

© UNITAC INC. 4812661 (06/2012)